AIRTRONIC* / AIRTRONIC* M

Espar Heater Systems

Technical Description
Installation Instructions
Operating Instructions
Maintenance Instructions
Troubleshooting and Repair Instructions
Parts List

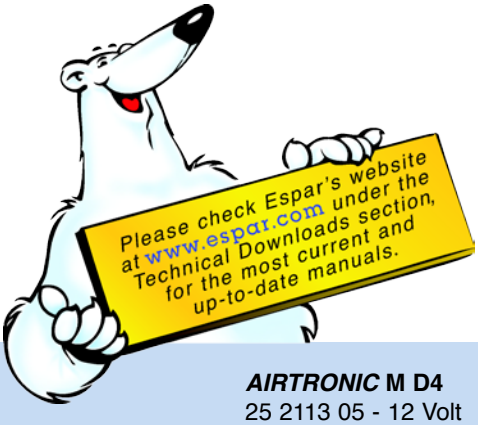

Espar Products, Inc.
(800) 387-4800
(905) 670-0960
www.espar.com

***AIRTRONIC* D2**
25 2069 05 - 12 Volt
25 2070 05 - 24 Volt

***AIRTRONIC* D2 Camper**
25 2326 05 - 12 Volt

***AIRTRONIC* M D4**
25 2113 05 - 12 Volt
25 2114 05 - 24 Volt

***AIRTRONIC* M D4S**
25 2144 05 - 12 Volt

***AIRTRONIC* M D4 Camper Plus**
25 2327 05 - 12 Volt

***AIRTRONIC* M B4**
20 1812 05 - 12 Volt

P/N: 20 2900 81 01 03 08 . 2010 Subject to Change Web Edition

Table of Contents **Page**

Introduction	Heater Warnings	3
	Introduction	4
	Technical Data	5
	Dimensions	6
	Heater Components	7
Installation Procedures	Heater Location	8
	Heater Mounting	8
	Heater Plate installation	8
	Mounting Pattern	9
	Heater Air Ducting	9
	Ducting Components	9
	Fuel System	10
	Electrical Connections	12
	Exhaust/Intake Connections	13
	Operating Switches	13
Heater Operation	Switch on	14
	Start-Up	14
	Temperature setting	15
	Temperature Control	16
	Switching Off	16
	Controls & Safety Equipment	16
	Operational Flow Chart	16
	Function Diagrams	17
	Schematic ***AIRTRONIC* D2/D4**	18
Maintenance, Troubleshooting & Repairs	Periodic Maintenance	21
	Basic Troubleshooting	21
	Self Diagnostic Troubleshooting	22
	Fault Codes	23
	Fuel Quantity Test	29
	Overheat/Flame sensor values	29
	Control and Resistance values	30
	Repair Steps	31
Heater Parts	***AIRTRONIC* D2/D4**	
	-Service Parts Diagram	36
	-Service Parts List	37
	-Parts List Diagram	38
	-Parts List	39

Special Notes

Note: Highlight areas requiring special attention or clarification.

Caution: *Indicates that personal injury or damage to equipment may occur unless specific guidelines are followed.*

Warning: Indicates that serious or fatal injury may result if specific guidelines are not followed.

This document aims to support service technicians and end users in North America. This does not replace documentation produced by J. Eberspächer.

The installation instructions and standards described in this document are NOT APPLICABLE TO MARINE INSTALLATIONS. Please consult a certified Espar Marine dealer for marine installation.

This publication was correct at the time of going to print. However, Espar Inc. has a policy of continuous improvement and reserves the right to amend any specifications without prior notice.

Heater Warnings

Warning To Installer:

Correct installation of this heater is necessary to ensure safe and proper operation.
Read and understand this manual before attempting to install a heater.

Warning - Explosion Hazard

1. Heater must be turned off while re-fueling.
2. Do not install heater in enclosed areas where combustible fumes may be present.
3. Do not install heaters in engine compartments of marine vessels.

Warning - Fire Hazard

1. Install heater so it will maintain a minimum distance of 2" from any flammable or heat sensitive material.
2. Install the exhaust system so it will maintain a minimum distance of 2" from any flammable or heat sensitive material.
3. Ensure that the fuel system is intact and there are no leaks.

Failure to follow these instructions could cause fire resulting in serious or fatal injury.

Warning - Asphyxiation Hazard

1. Route the heater exhaust so that exhaust fumes can not enter any passenger compartments.
2. Ensure an air tight seal is maintained between the heater and mounting surface and at any exhaust connection points.
3. Ensure that heating air supply is taken from an area where poisonous gases will not be present.
4. If running exhaust components through an enclosed compartment, ensure that it is vented to the outside.

Failure to follow these instructions could cause oxygen depletion resulting in serious or fatal injury.

Direct questions to Espar Heater Systems

Canada & U.S.A. 1-800-387-4800

ATTENTION

Operation with bio-diesel

***AIRTRONIC* D2 / D4**

AIRTRONIC D2 / D4 is not certified for use with bio-diesel. Admixtures of bio-diesel up to a magnitude of approx. 10%.

ATTENTION

Heating at high altitudes

Up to 1500 meters (4920') - unrestricted heating operation is possible.

Above 1500 meters (4920') - heating operation is in principle possible for short periods, e.g. when crossing a mountain pass or during a brief stop. In cases of extended stays , the fuel supply at the fuel metering pump has to be adapted to high altitude conditions.

The following high altitude kits are available:

P/N: 24 0222 00 00 00 - 12V only (Contains high altitude fuel pump)
or
P/N: 20 2900 70 00 07 - 12V or 24V (Contains high altitude compensator, no extra fuel pump needed)
or
P/N: 22 1000 33 22 00 - 12V or 24V (Only works with Airtronic Heaters that have "H-Kit" on the factory label)

Note: Only one kit from the listed above is needed.

Marine conciderations:

- Follow marine manual for installation requirements (separete document)
- Gasoline (B4) heaters must not be installed in ingene compartment.
- Diesel or Gasoline (petrol) heaters must not be installed in engine compartment of gasoline (petrol) boats.

Introduction

Espar 's *AIRTRONIC* bunk heaters

The *AIRTRONIC* D2 is a compact diesel-fired 7,500 BTU/hr air heater, quality engineered to provide a dependable means of space heating. This heater is uniquely designed for inside mounting and ease of installation. The *AIRTRONIC* D4 is a 13,650 BTU/hr air heater for larger bunks.

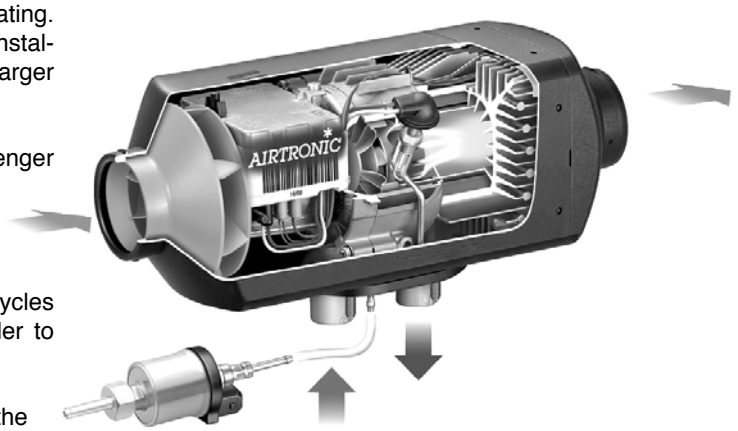

These heaters provide hot air to the interior of vehicles for passenger comfort. Since the heater runs on diesel fuel and are available in 12 or 24 volt versions, it is able to provide space heat completely independently of the vehicle engine.

Various control options are available to operate the heater. It cycles through four heat output modes (boost-high-medium-low) in order to maintain the desired temperature.

In special cases where the heat output required is less then what the "low" power mode provides the heater switches to "stand-by" mode. Temperature and overheat sensors, and a specially designed heat exchanger are among the safety features which make this heater a safe and dependable unit.

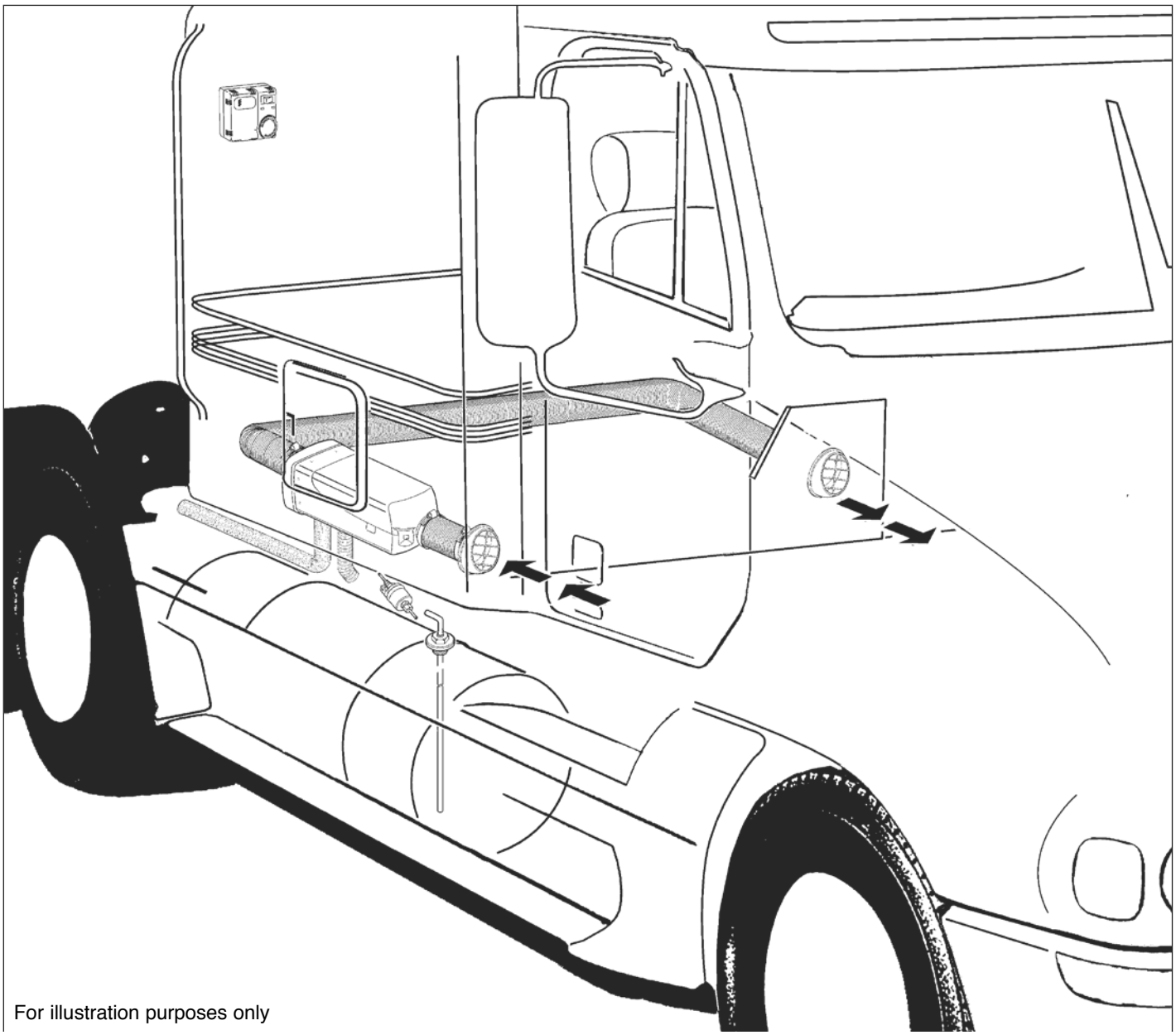

For illustration purposes only

Product Information

Technical Data

Heater	***AIRTRONIC* D2**			***AIRTRONIC* D4**			***AIRTRONIC* B4**		
Heat Output (±10%)	7,500 BTU/hr Boost (2.2 kW) 6,150 BTU/hr High (1.8 kW) 4,100 BTU/hr Medium (1.2 kW) 2,900 BTU/hr Low (0.85 kW)			13,650 BTU/hr Boost (4.0 kW) 10,200 BTU/hr High (3.0 kW) 6,800 BTU/hr Medium (2.0 kW) 3,500 BTU/hr Low (1.0 kW)			12,950 BTU/hr Boost (3.8 kW) 10,910 BTU/hr High (3.2 kW) 7,160 BTU/hr Medium (2.1 kW) 4,430 BTU/hr Boost (1.3 kW)		
Current at 12v (±10%)	8.3 amps - Start 2.8 amps - Boost 1.8 amps - High 1.0 amps - Medium 0.7 amps - Low 0.4 amps - Stand by			8.3 amps - Start 3.3 amps - Boost 2.0 amps - High 1.1 amps - Medium 0.6 amps - Low 0.4 amps - Stand by			8.3 amps - Start 3.3 amps - Boost 2.4 amps - High 1.3 amps - Medium 0.8 amps - Low 0.4 amps - Stand by		
Current at 24v (±10%)	4.2 amps - Start 1.4 amps - Boost 0.92 amps - High 0.5 amps - Medium 0.3 amps - Low 0.2 amps - Stand by			4.2 amps - Start 1.7 amps - Boost 1.0 amps - High 0.5 amps - Medium 0.3 amps - Low 0.2 amps - Stand by			(No 24V version available)		
Fuel Consumption (±10%)		U.S. Gal/hr	Litre/hr		U.S. Gal/hr	Litre/hr		U.S. Gal/hr	Litre/hr
	Boost High Medium Low	0.07 0.06 0.04 0.03	0.28 0.23 0.15 0.10	Boost High Medium Low	0.13 0.10 0.07 0.03	0.51 0.38 0.25 0.11	Boost High Medium Low	0.14 0.12 0.08 0.05	0.54 0.46 0.29 0.18
Air Flow (±10%)	48 cfm Boost 40 cfm High 27 cfm Medium 19 cfm Low 6 cfm Stand by			85 cfm Boost 69 cfm High 50 cfm Medium 30 cfm Low 11 cfm Stand by			85 cfm Boost 74 cfm High 55 cfm Medium 43 cfm Low 11 cfm Stand by		
Operating Voltage Range	10.5 - 16 vdc at 12 vdc 21 - 32 vdc at 24 vdc			10.5 - 16 vdc at 12 vdc 21 - 32 vdc at 24 vdc			10.5 - 16 vdc at 12 vdc 21 - 32 vdc at 24 vdc		
Overheat Temperature Shutdown (±10%)	240°F (115°C)			240°F (116°C)			240°F (116°C)		
Ambient Operating Temperature	-40°F to 158°F (-40°C to 70°C)			-40°F to 158°F (-40°C to 70°C)			-40°F to 122°F (-40°C to 50°C)		
Weight	5.9 lbs. (2.7 kg)			9.9 lbs. (4.5 kg)			9.9 lbs. (4.5 kg)		

Note: The heater control unit is equipped with a low voltage cutout to prevent vehicle battery drain and a high voltage cutout to protect heater electrical parts.

Note: The terms "Boost" and "Power" are used interchangeably through out this manual. The terms refer to the highest level of heat output.

Product Information

* All measurements in millimeters
  25.4 mm = 1”

❶ Minimum installation distance (clearance) to open the lid and to dismount the glow pin and the control unit.

❷ Minimum installation distance (clearance) to take in heating air.

Principal Dimensions *AIRTRONIC* D2

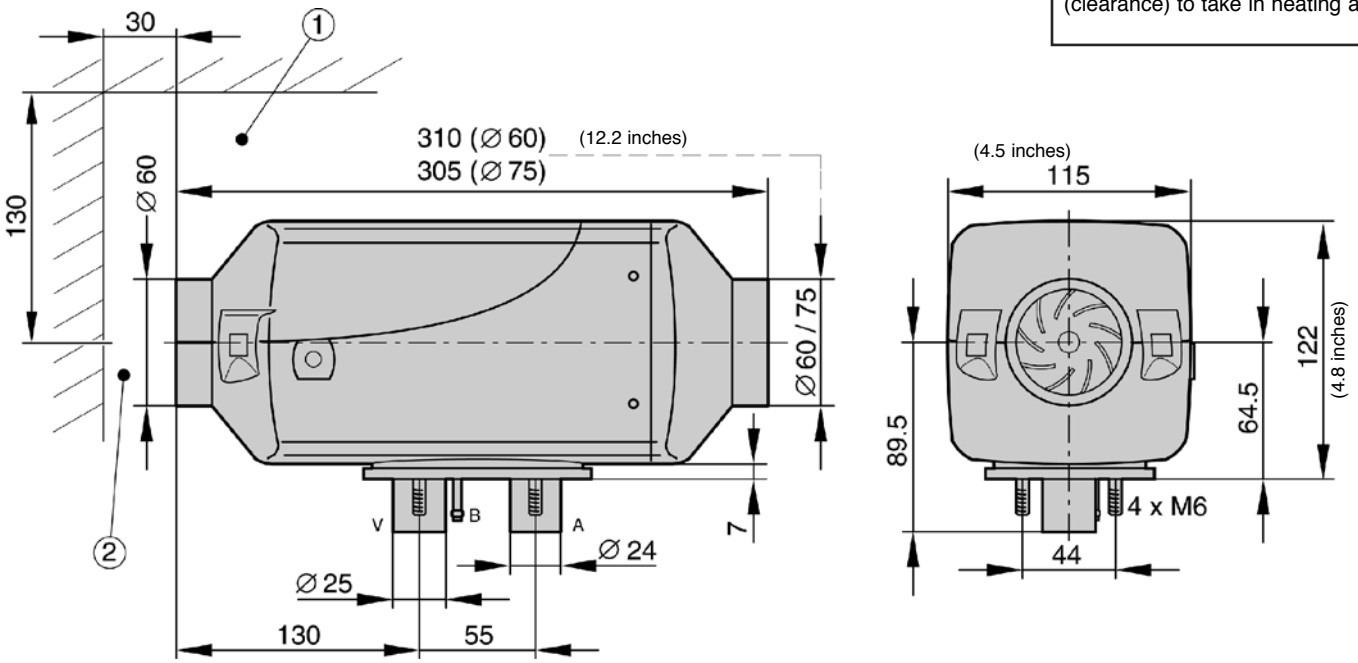

Principal Dimensions *AIRTRONIC* B / D4

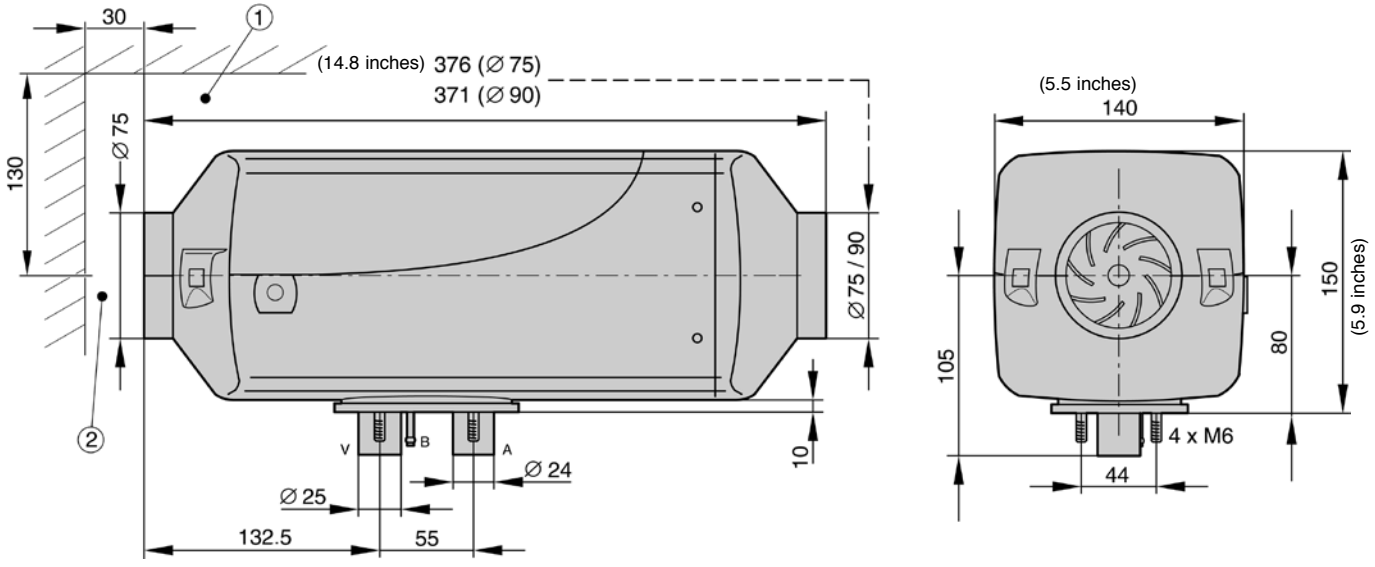

Heater Components

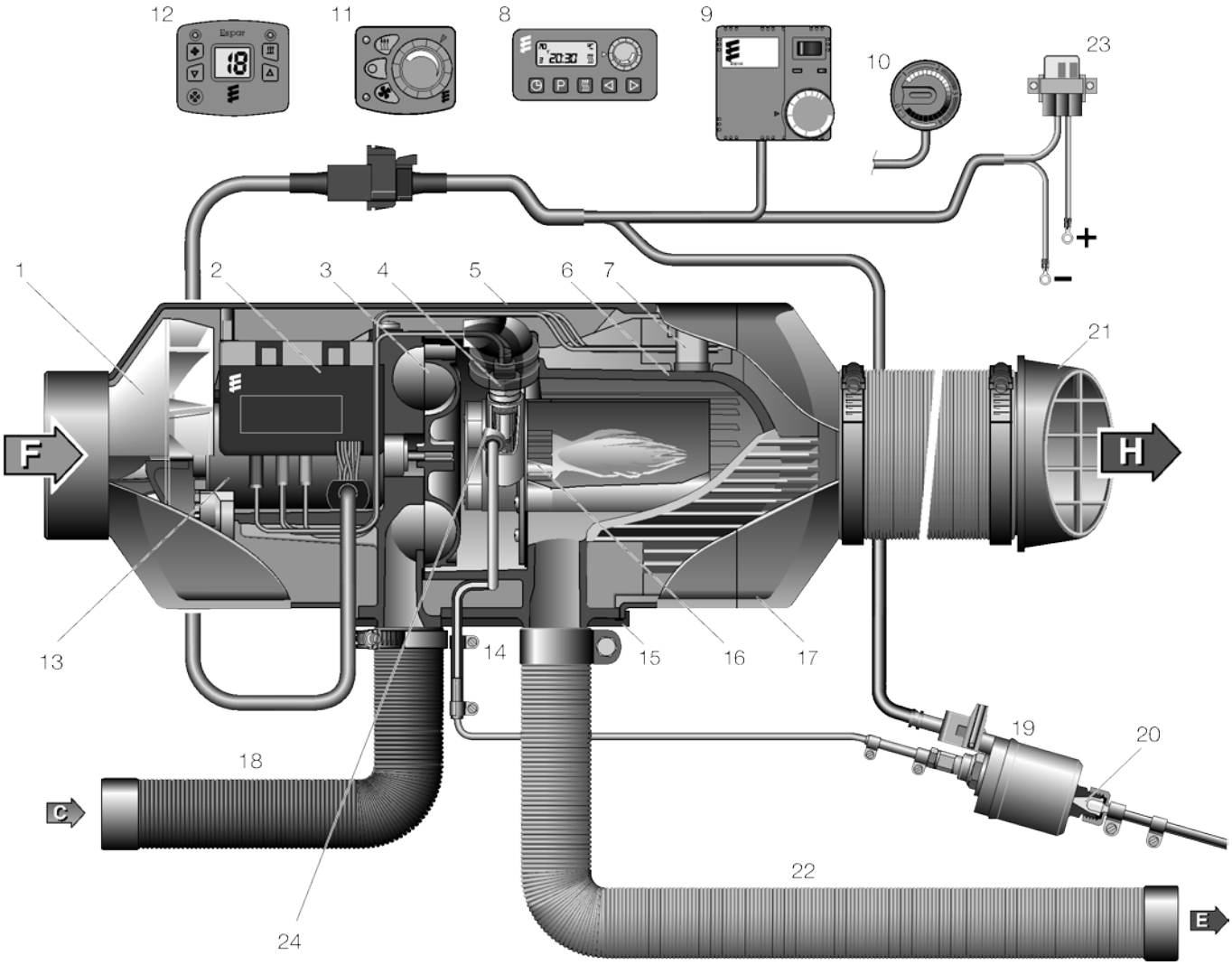

1 Hot Air Blower Wheel
2 ECU
3 Combustion Air Blower Wheel
4 Glow Pin
5 Cover
6 Heat Exchanger
7 Overheat/Flame sensor
8 7 Day Timer with Thermostat (optional)
9 Operating Unit (Thermostat)
10 Operating Unit (Rheostat)
11 Mini Controller
12 Digi Controller
13 Blower Motor
14 Fuel Connection
15 Flange Seal
16 Combustion Chamber (Burner)
17 Hot Air Outlet Hood
18 Combustion Air Intake Hose
19 Fuel Metering Pump
20 Fuel Filter built into FMP
21 Hot Air Output Deflector
22 Flexible Exhaust Pipe
23 Main Fuse: -
AIRTRONIC 12 V - 20 A Fuse
AIRTRONIC 24 V - 10 A Fuse
23 Vent Hole

C = Combustion Air
D = Fuel Intake from Tank
E = Exhaust
F = Fresh Air Intake
H = Hot Air Output

Installation

Heater Location

Depending on the type of vehicle, the best location for mounting the heater will vary. Typically, air heaters are mounted inside tool or luggage compartments. However, the heater may be mounted anywhere inside the vehicle provided you adhere to the following conditions:

- Combustion air intake, exhaust and fuel inlet must be located outside of the vehicle.
- Heater must be mounted on flat horizontal surface providing an air tight seal between heater and vehicle.
- Do not mount the heater outside the vehicle, unless care is taken to protect the heater from the weather. When selecting the location, consider the following:
- Combustion air and exhaust connections.
- Ducting.
- Fuel line connections.
- Electrical connections.

Heater Location

A mounting plate and hardware are provided with the truck heater kit.

- Choose heater location.

- Cut a 4-1/2" hole or a rectangular opening 4"x 5" to accommodate mounting plate and seal. Secure mounting plate to vehicle with provided "Tek" screws.

- Mount heater on mounting plate with nuts and spring washers provided.

- If the mounting plate will not be used, the heater flange can be used as a template to mark where the individual components openings should be made. (A diagram of the flange is on the fallowing page.)

- For ease of installation make the exhaust, combustion air intake and fuel connections at the base of the heater before mounting the heater. See the fallowing pages for instructions and restrictions on the exhaust, combustion air intake and fuel connections.

Wiring harness mounting

For convenient installation and maintenance purposes the wiring harness can be mounted on the left or right side of the heater housing. To do this the ECU must be removed from the heater. The bottom of the ECU has is a plastic flap that holds the wiring in place. Unlatch the plastic flap and position the harness in the direction that you desire. Before relatching the plastic flap ensure, that the wiring is laid neatly so that the latch can closed without excessive force. When mounting the harness to the housing remove the grommet from one side of the housing and replace on the opposite side.

Heater Mounting Plate Installation

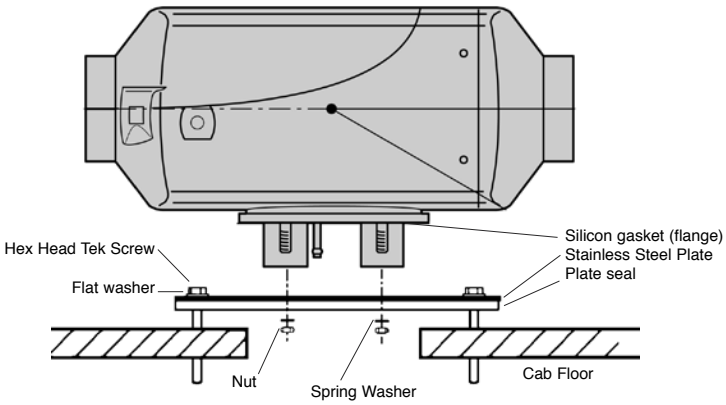

Note: Tighten screws sufficiently to ensure positive seal between mounting plate and mountingsurface. Do not over tighten.

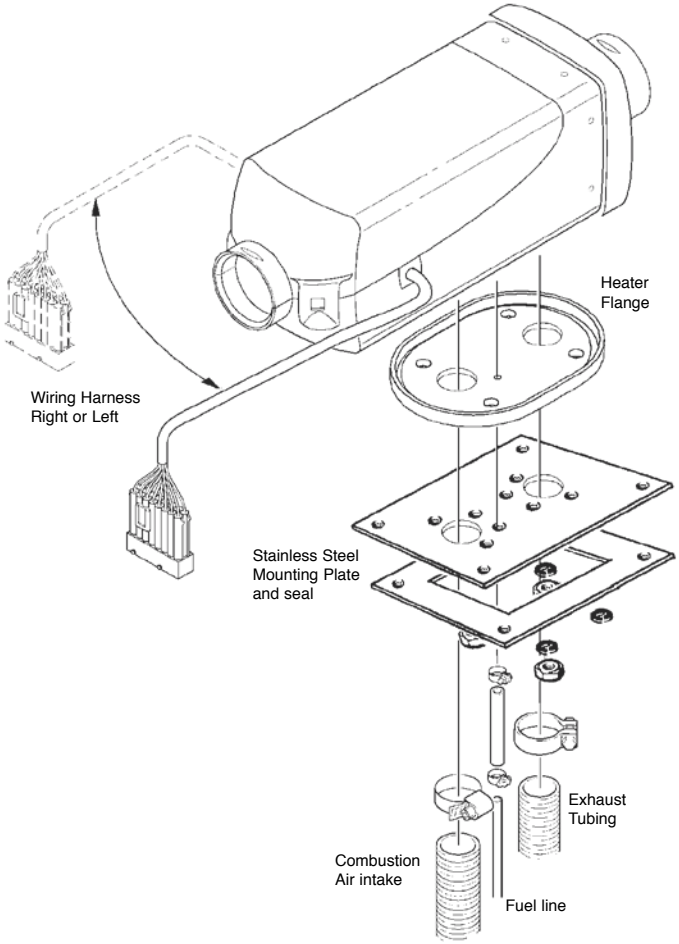

Allowable Mounting Angle

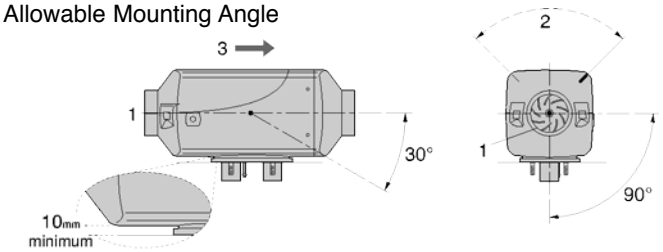

Note: The fallowing pages refer to a standard installation kit. Components included with different kits may vary.

Installation

Mounting Pattern

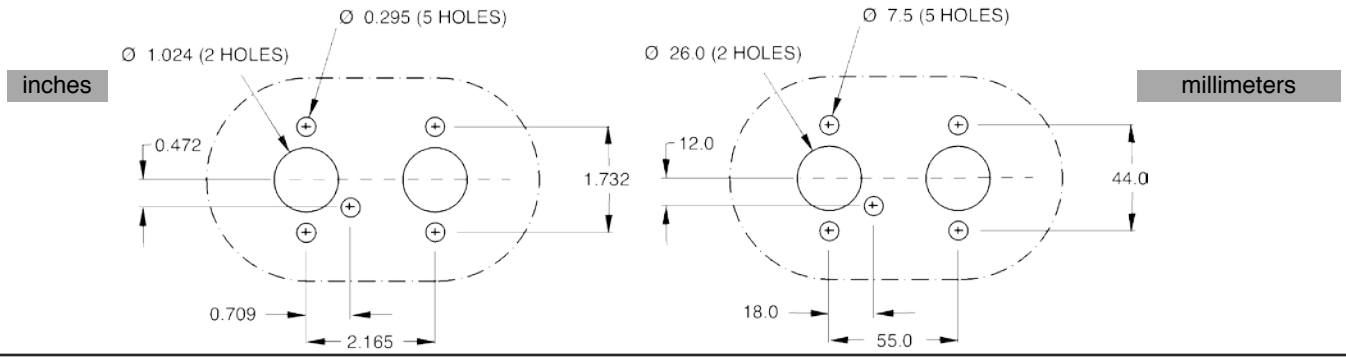

Heater Air Ducting Installation

A 60mm flexible duct 40 inches long, hot air outlet and clamps are provided with the heater kit. In routing and installing the ducting the following criteria must be observed:

- Route ducting with smooth bends. Avoid crushing duct.
- Position hot air outlet so that it cannot be obstructed.
- When not using return ducting. Use a protective air intake grille on air inlet side of heater to prevent objects from being sucked in.
- Ensure provisions are made for proper air return ventilation.
- Use return air ducting for best heating efficiency.
- For exact ducting design specifications please refer to Product Catalogue.

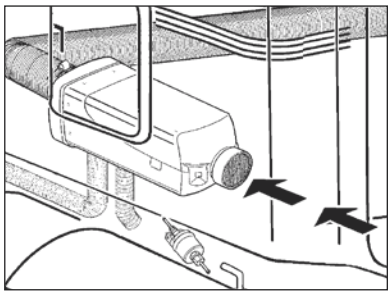

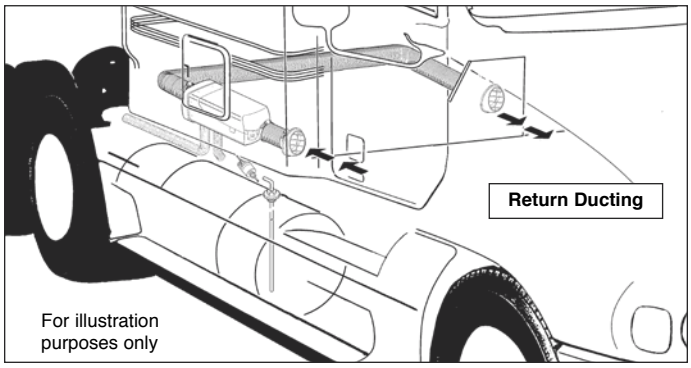

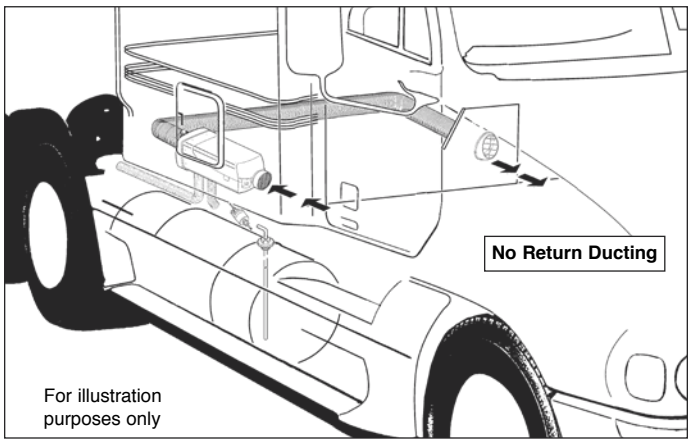

Ducting Components

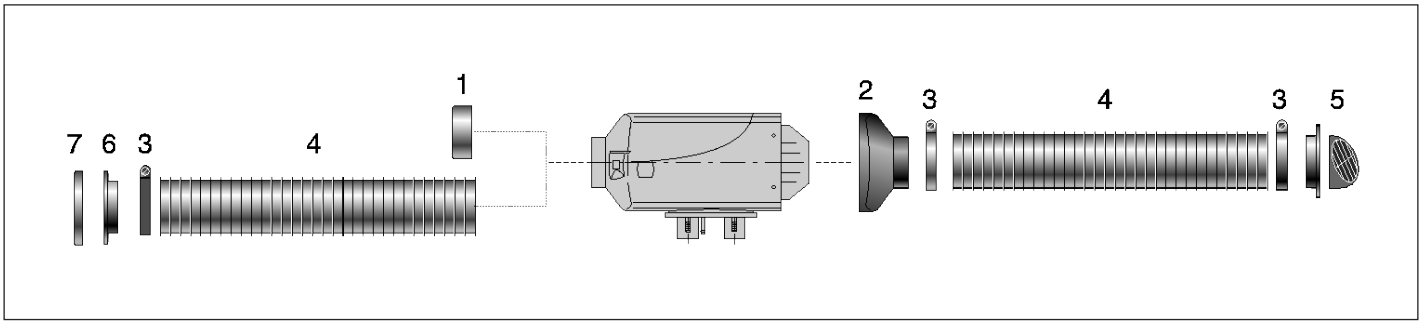

1. Protective Grill
2. Air Outlet Hood
3. Hose Clamp
4. Flex Duct
5. Air Outlet - Rotatable
6. Connection Piece
7. Protective Grill

Note: For exact ducting design specifications please refer to Product Catalogue.

Warning: Do not use existing vehicle ducting or outlets. Ducts and outlets must be capable of withstanding a minimum of 300°F operating temperatures.

Warning: Do not over tighten duct clamps. May damage heater and result in a costly repair.

Caution: *Do not position outlet so that it will blow hot air directly at operator, at room thermostat, or return air inlet.*

Installation

Fuel System

The fuel metering pump is the heart of the system and must be installed properly to ensure successful heater operation.

Fuel System Overview

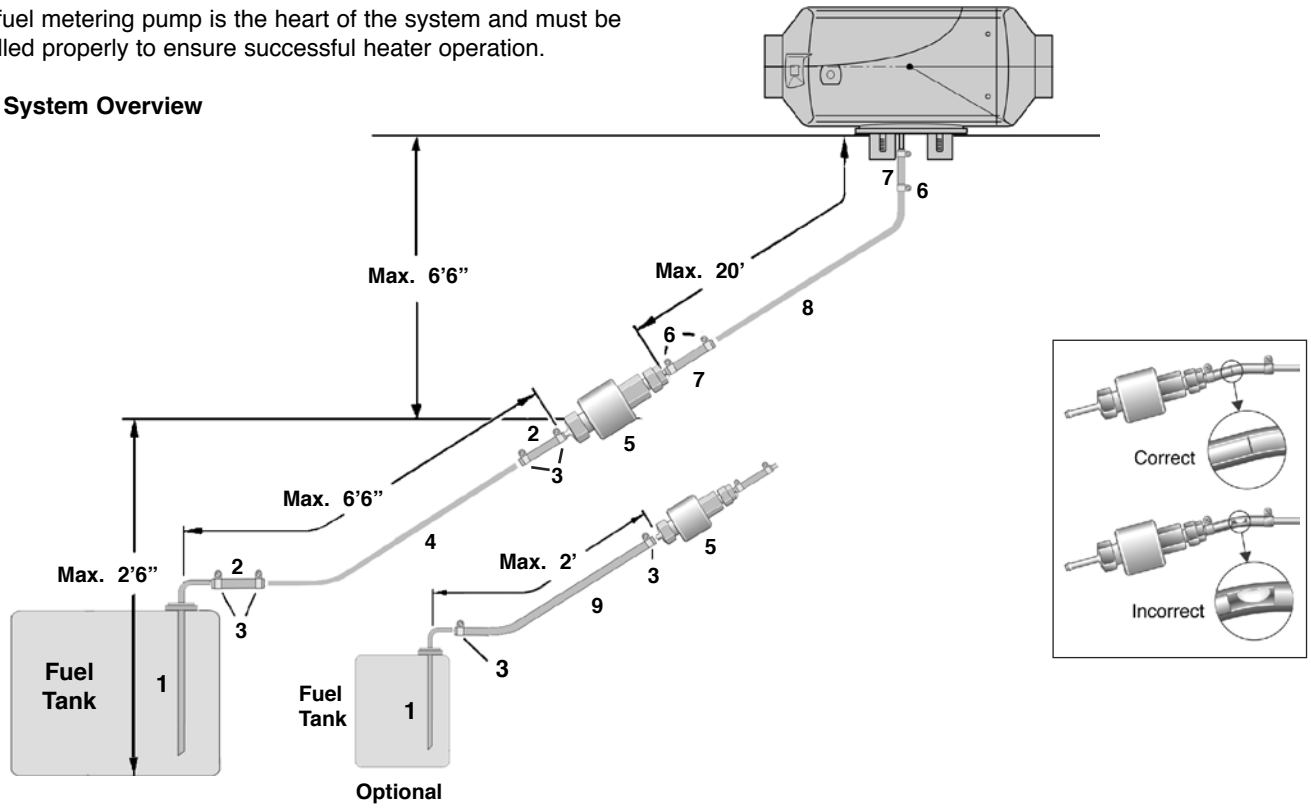

Note: Use butt joints and clamps on all connections.

1. Fuel Pick-Up Pipe
2. 5.0mm Rubber Connector
3. 11mm Clamp
4. 2.0mm Black Plastic Fuel Line
5. Fuel Metering Pump
6. 9mm Clamp
7. 3.5mm Rubber Connector
8. 1.5mm or 2.0mm White Plastic Fuel Line
9. 5mm Rubber Fuel Line

Fuel Pick-Up Pipe Installation (Drill Option)

- Choose a protected mounting location close to the fuel pump and heater. A spare fuel sender gauge plate provides an ideal mounting location.
- Drill the mounting holes as shown.
- Tighten Ferrule nut to pick-up pipe at desired height.
- Cut the fuel pick-up pipe to length.
- Mount the fuel pick-up pipe as shown.
- Lower the fuel pick-up pipe (with reinforcing washer) into the tank using the slot created by the two 1/4" holes.
- Lift the assembly into position through the 1" hole.
- Assemble the rubber washer, fuel metering pump bracket, metal cup washer and nut.

Note: Drill the two 1/4" holes first.

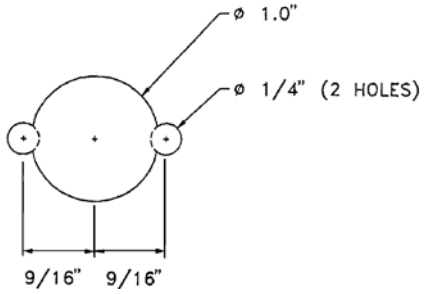

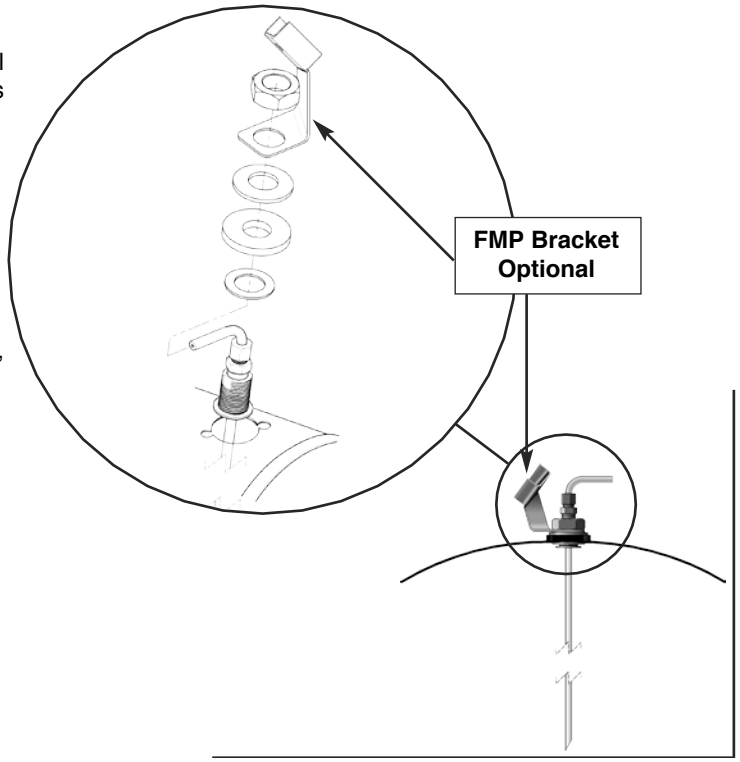

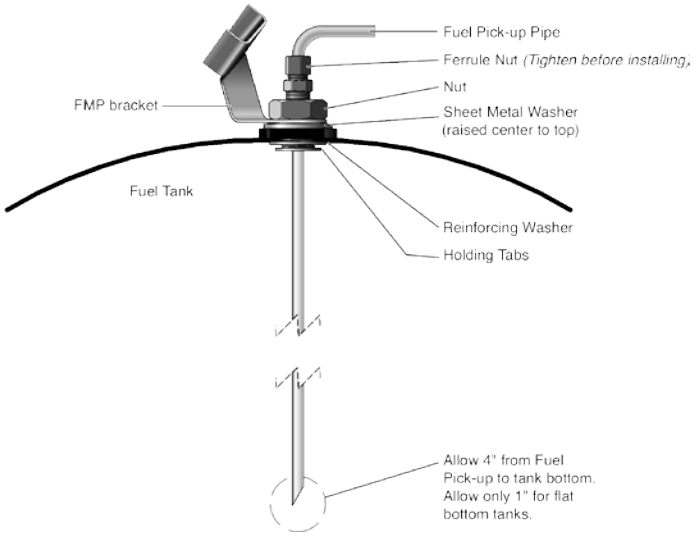

Custom Pick-Up Pipe with 1/4" NPT fitting - option

Standard pick-up pipe can be installed as a drill type installation or 1/4 NPT type installation.

- Remove an existing NPT plug from the top of the fuel tank.
- Cut the fuel pick-up pipe to length.
- Secure the fuel pick-up pipe into position using the combined NPT compression fitting.

Note: FMP bracket is not compatible with NPT pick up option.

Note: Refer to product catalogue for other pick-up pipe options.

Fuel Metering Pump

- Choose a protected mounting location close to the fuel pick- up pipe and heater if not using standard assembly as shown on right.
- Using the bracket and rubber mount provided, install fuel pump as shown.

Note: Proper mounting angle of the fuel pump is necessary to allow any air or vapor in the fuel lines to pass through the pump rather than cause a blockage.

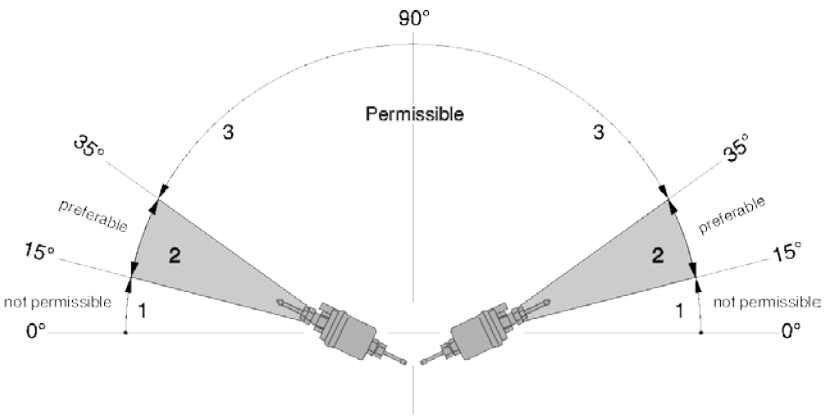

1 Installation position between 0° and 15° is not allowed.
2 Preferred installation position in range 15° to 35°.
3 Installation position in range 35° to 90° is allowed.

Fuel Line

- Route fuel lines from the fuel pick-up pipe to the fuel metering pump then to the heater.
- Use fuel lines provided.
- Other sizes or types of fuel lines may inhibit proper fuel flow.
- Make proper butt joints using clamps and connector pieces as shown on previous page.
- Use a sharp utility knife to cut plastic fuel lines to avoid burrs and pinching fuel line shut.

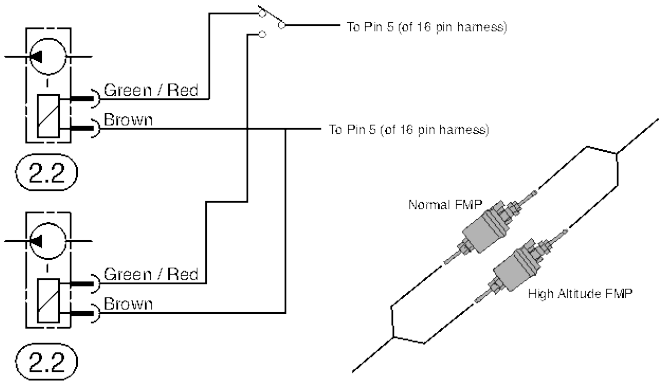

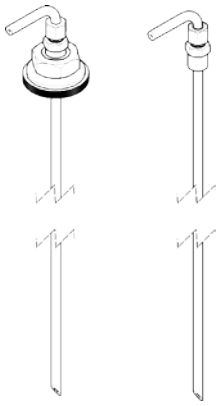

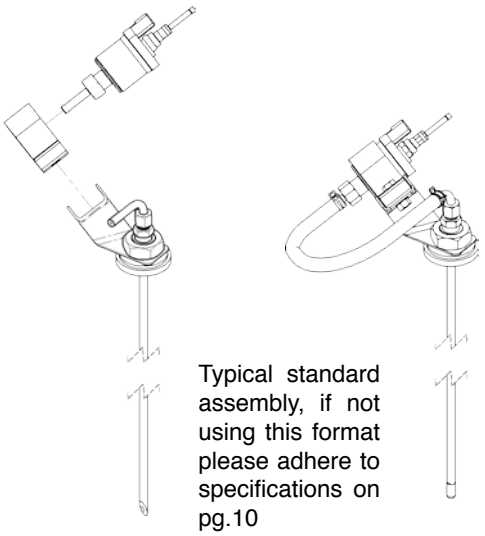

Typical standard assembly, if not using this format please adhere to specifications on pg.10

Installation

Electrical Connections

Main Harness..... 16 pin connector with 10 terminated wires at 8 terminals. (green/red, blue/white (2), red, grey/red, grey, brown, brown/white and yellow (2)). Connect to the heater's 16 pin connector. Main harness branches off to sub harness's described below.

Power Harness..... 2 core harness (red and brown). Route power harness to batteries, cut to length and terminate. Install 20 amp fuse last (10 amp on 24V). Connect red wire to fuse holder near battery. Connect fuse link wire directly to battery positive post using ring terminal. Connect brown wire directly to battery negative post using ring terminal.

Switch Harness..... 7 core harness (red, brown/white, yellow, grey, brown, grey/red and blue/white). Route this harness to the control option mounted in the cab. Do not cut this harness, wires have been soldered at ends for convenience of terminating to terminals of the control option. Coil up excess harness and secure in safe location.
Connect to control option (refer to switch connection section).

Fuel Metering Pump Harness..... 2 core harness (green/red and brown).
Route this harness from heater to fuel metering pump. Cut to length and connect to fuel metering pump using single terminals and connector provided with kit.

Note: Polarity does not matter for FMP connection.

Diagnostic Harness..... 8 pin connector (red, brown, yellow, blue/white). For diagnostic purposes only.

Caution: *Install power 20 amp fuse only after all electrical connections are complete. (10 amp fuse on 24V.)*

Note: All exposed electrical connections should be coated with protective grease, (petroleum gel, Vaseline, etc.).

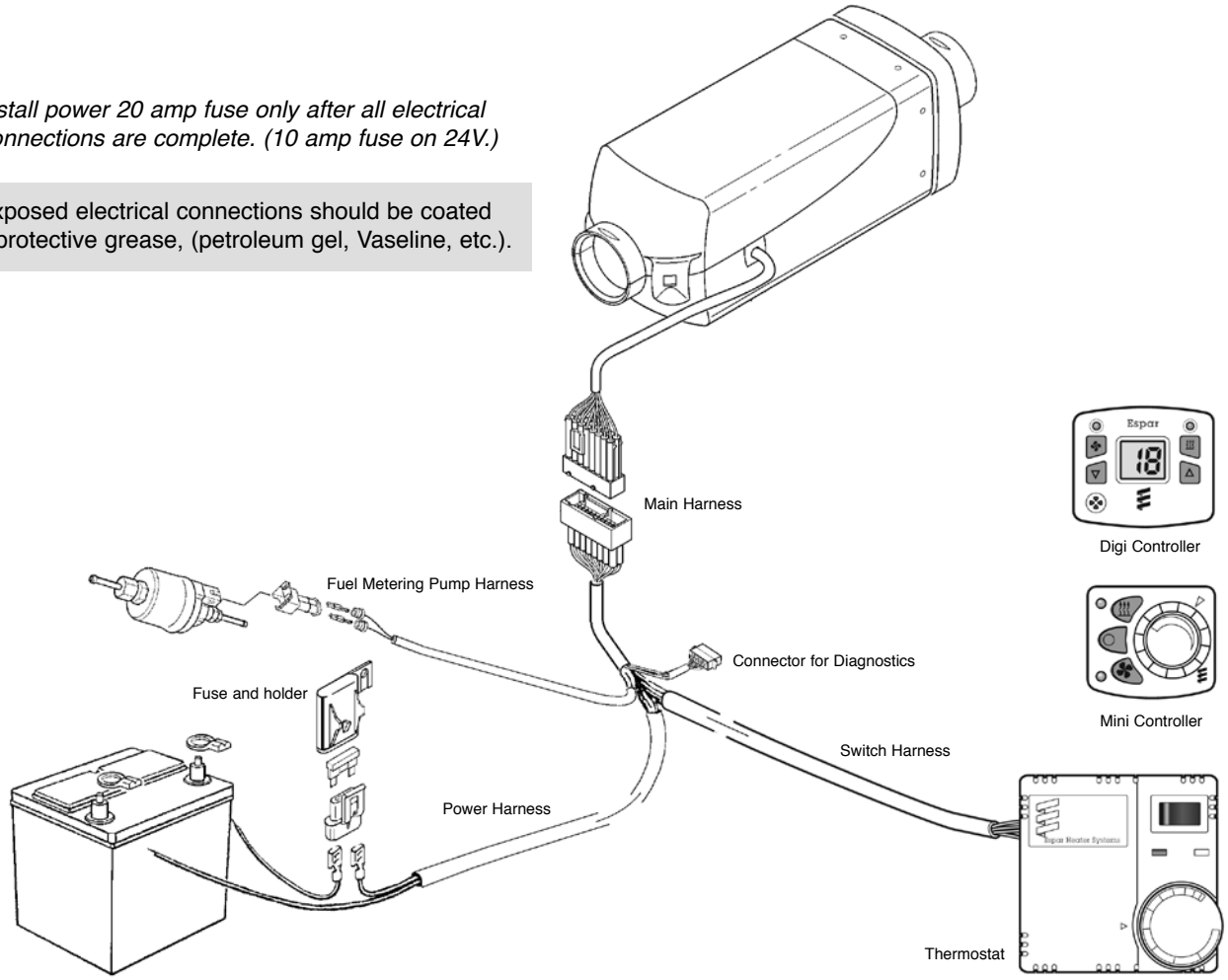

Installation / Operation and Function

Exhaust and Combustion Air Intake Connections

A 24mm flexible stainless steel exhaust pipe (40" long) and a 25mm flexible plastic tube (40" long) for combustion air intake are included with the heater kit. Exhaust clamps and holders are also provided.

Caution: *Route exhaust and combustion air intakes so they cannot be plugged by dirt, water or snow. Ensure the outlets do not face into the vehicle slip stream. Keep exhaust and combustion air intake a minimum of 12" apart.*
Drill 1/8" holes in exhaust pipe if necessary to allow water drainage.
Combustion air intake and exhaust lengths can be shortened to a minimum of 8".

- Attach the exhaust pipe to the exhaust outlet of the heat exchanger.
- Route exhaust pipe to an open area to the rear or side of the vehicle so that fumes cannot build up and enter the cab or the combustion air inlet to the heater.
- Install protective cap.
- Attach the combustion air intake tube to the combustion air inlet of the heater.
- Once secure to the heater inlet, the intake pipe must be routed to the underside of the vehicle where it will pick up clean, fresh, moisture free air.

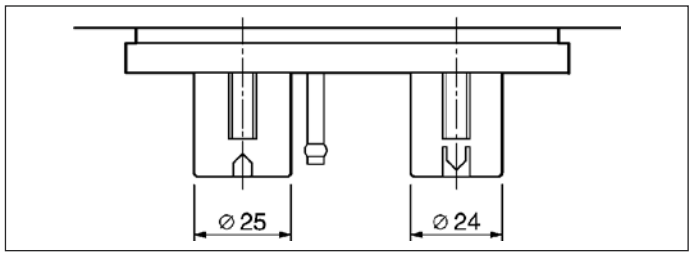

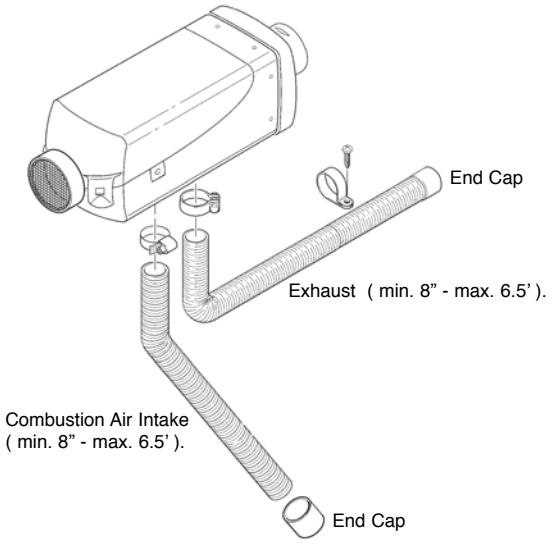

Note: Bends in both the intake and exhaust pipes should be kept to a minimal. For every 90° bend it is recommended to shorten pipe by 16" (40cm).

Warning: The exhaust is hot, keep a minimum of 2" clearance from any heat sensitive material.

Warning: Route exhaust so that the exhaust fumes cannot enter the passenger compartment.

Operating Switches

The heater can be controlled using a Mini Controller, Digi Controller, Thermostat or Rheostat type switch. It can also be controlled by a 7 day timer with thermostat. See schematic pg. 19.

Mini Controller

- Stick the drilling template to the required place of installation.
- Drill 2.5mm and 7.5mm holes.
- Remove the control knob from the mini controller.
- Fit the mini controller with the foam base.
- Screw in fixing screw up to the end stop.
- Put the control knob on the mini controller. The arresting device in the control knob must be inserted in the keyway in the mini controller.
- Connect the mini controller in accordance with the circuit diagram.

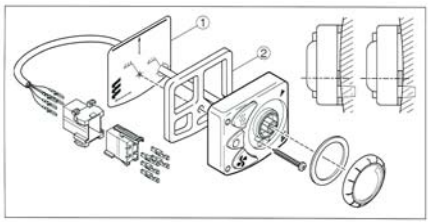

1 Drilling template
2 Elastic base for uneven installation area

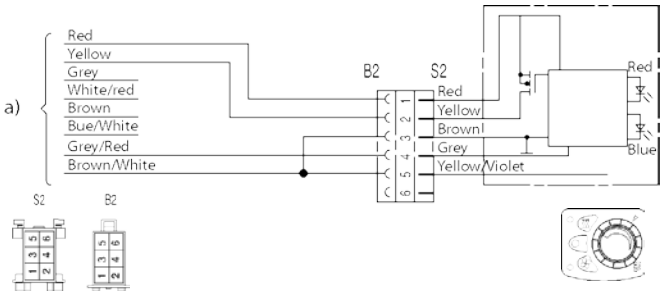

a) Connection of control elements on the heater:

red	battery +
yellow	switch on signal
grey	optional external sensor
brown	battery -
blue / white	diagnostics
grey / red	set temperature value
brown / white	sensor reference ground

Note: Insulate any cable ends not used.
The connectors and socket housing are shown from the cable entry side.

Thermostat

- Select a mounting location which will be representative of the average temperature of the area being heated. Avoid mounting near heater outlets, windows, doors, electrical appliances or in areas receiving direct sunlight.
- Route the switch harness from the heater to the thermostat mounting location.
- Mount the thermostat as shown using proper mounting hardware and the slots provided on the thermostat base. Pull the switch harness through the thermostat base access hole.
- Connect the six core switch harness to the thermostat as shown.

Operation and Function

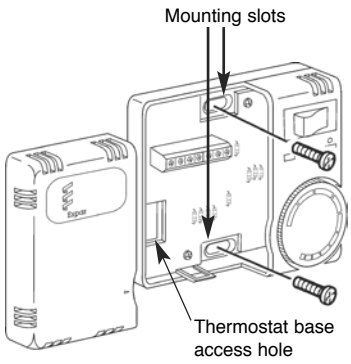

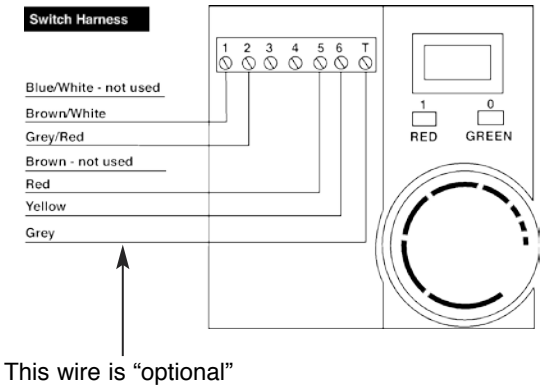

Grey wire notes:

- It is recommended that when using return ducting, not to use this wire. See illustration on pg. 9 for ducting.
- Not using the grey wire defaults the heater to use the temperature sensor on the control unit of the heater.
- Use of the grey wire defaults the heater to use the sensor on the thermostat.
- The sensor on the control unit provides a more accurate reading of the overall air temperature, the sensor in the thermostat gives more of a spot reading of the air surrounding the thermostat.

Temperature sensor on ***AIRTRONIC*** control unit. →

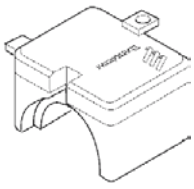

Rheostat Switch

Note: When using Rheostat switch, the **Return Ducting** method must be used as shown on page 9. This allows the ***AIRTRONIC*** heater's internal sensor to properly monitor cab temperature.
The ventilation and blink code diagnostic features do not work with Airtronic series heaters.

- Mount the rheostat switch in a location where it is easily accessible.
- Route the switch harness from the heater to the Rheostat mounting location.
- Connect the six core switch harness as shown.

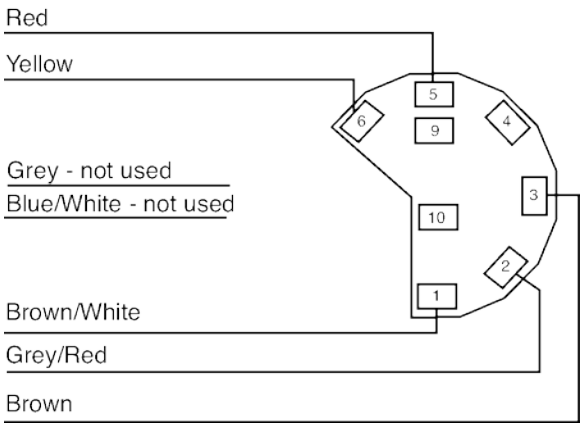

Heater Operation

Warning - Fire Hazard

To prevent fire, the heater must be switched off while filling fuel tanks. To prevent asphyxiation, the heater must not be operated in enclosed areas unless heat exhaust is routed to the outside.

1 Switch On

- Switch the heater on using the mini controller's heat button or the room thermostat's, On/Off switch (1=On, 0=Off) or the rheostat switch.

2 Start Up

On start up the indicator light illuminates and the following sequences take place:

- Control unit does a systems check of the glow pin, flame sensor/temperature sensor, fuel metering pump and control unit.
- Glow pin is energized and starts preheating the combustion chamber.
- Blower starts slowly and begins to accelerate.
- After a delay (approx. 60 seconds) the fuel pump delivers fuel.
- Ignition will take place as the fuel/air mixture begins to burn.
- Blower speed and fuel delivery are slowly increased.
- Once flame sensor has detected a flame the glow pin will switch off.
- The heater will regulate power output according to the temperature and temperature set point.

Operation and Function

3 Temperature Setting for Mini Controller

The mini controller enables you to set the heater to the temperature that you require.

You can control the desired temperature range by turning the dial clockwise to increase temperature.

- Lowest Setting - approx. 47°F (8.5°C)
- Highest Setting - approx. 97°F (36°C)

Use the “Heater” button to start the heater in heating mode (continuous operation). You can adjust the required temperature with the temperature control knob. If the heater is in heating mode, the red LED lights up as a check.

Use the “Fan” button to start the heater in fan mode (continuous operation). This feature circulates the air through out the cabin area. The temperature control knob has no function in fan mode. If the heater is in fan mode, the blue LED lights up as a check.

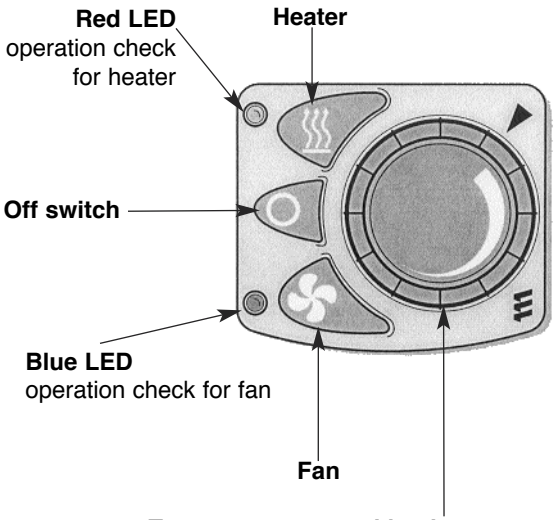

Temperature control knob

- Counter-clockwise end stop
  approx. 47°F (8.5°C) - small amount of heat
- Clockwise end stop
  approx. 97°F (36°C) - large amount of heat

4 Temperature Setting for Thermostat and Rheostat

Using the adjusting dial, set the desired temperature range.

- Lowest Setting - approx. 10°C (50°F)
- Mid - Setting - approx. 20°C (68°F)
- Highest Setting - approx. 30°C (86°F)

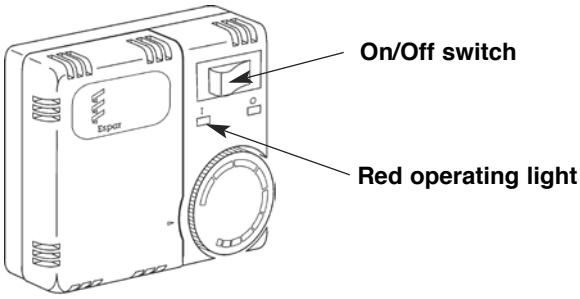

On OEM installs the “red” & “green” indicator lights illuminate.
On aftermarket installs only the “red” light illuminates.

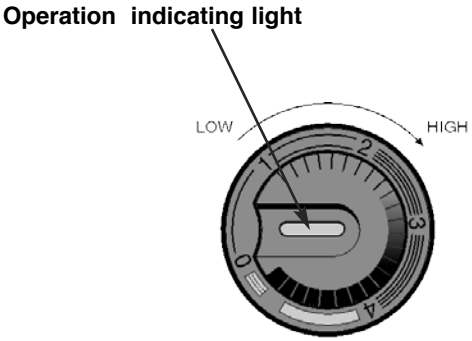

5 Other Control Options

Digi Controller

7 Day Timer

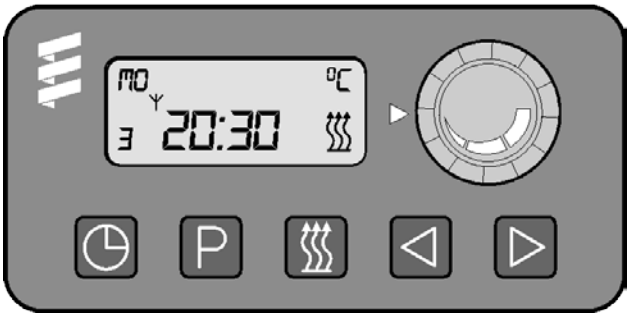

Operation and Function

6 Temperature Control

- The temperature is monitored constantly at the heater's process air inlet or external sensor.
- This temperature is compared to the set temperature on the adjusting dial (Mini controller/Thermostat...)
- The heater cycles through Boost, High, Medium and Low heat modes to maintain the desired temperature.
- If the desired temperature is exceeded while the heater is operating in low heat mode the heater will switch into "standby" mode.
- The heater will re-start once heat is required again.

7 Shut Down

Once switched off manually, the heater begins a controlled cool down cycle.

- Indicating light(s) on switch will go off.
- Fuel pump stops delivering fuel.
- The glow pin is re-energized for a 40 second after-glow to burn off any combustion residue.
- The blower continues to run for 4 minutes and automatically switches off.

8 Controls and Safety Equipment

- If the heater fails to ignite within two start attempts, a "no start" shut down occurs.
- If a flame out occurs after the heater has started, the heater will attempt one restart.
- If repeated flame outs occur within 10 minutes the heater will not restart.
- Overheat shut down will occur if there is a restriction of the heating air flow (i.e. blocked inlet or outlet).
  The overheatsensor will automatically reset once the heater has cooled down.
- Once the air flow restriction is removed, the heater can be re-started by switching the heater off then back on.
- If the voltage drops below 10 volts or rises above 16 volts the heater will shut down (21 volts and 32 volts for 24 volt systems).
- If the glow pin circuit or fuel metering pump circuit are interrupted the heater will not respond.
- The blower motor is checkeed continuously during operation.
  Shut down will occur if the blower does not start or maintain proper speed.

Operational Chart*
Normal Operation

	STARTING PHASE					RUNNING PHASE		SHUT DOWN		PHASE
Operating Mode	System Check	Pre-heat	Ignition Attempt	Pre-heat 2nd. attempt	Ignition Attempt 2nd. attempt	Boost	Controlled Heating	After Glow	Cool Down	Stand by
Blower	Off [a]	On	On	On	On	On	On	On [c]	On	On
Glow Pin	Off	On	On	On	On	Off	Off	Off	Off	Off
Fuel Pump	Off	Off	On	Off	On	On	On	Off	Off	Off
TIME 00:00	1- 3 sec. [a]	60 sec. [d]	Up to 90 sec.	120 sec. If Required	Up to 90 sec.	Time dependent on heat exchanger temperature	Continual Operation until switched off by operator or temperature control	40 sec.	4 min.	

* The timing shown is for the latest Airtronic D2 during normal operation. The timing does not account for ECU timing variances, or special situations. Timing for other Airtronic heaters will vary. When timing is viewed on EDiTH software, timing will be different because of communication delay between computer and the heater.

a) Blower is momentarily ON during System Check.
b) If desired heat level is exceeded, the heater will switch into Stand By. The heater will automatically restart once heat is required. The restart from Stand By is similar to Pre-heat and Ignition attempt stages in Starting Phase.
c) The Blower is off during Stand By if an external temperature sensor is connected.
d) Time may vary if Glow Pin requires more or less energy to achieve required temperature.
e) If ECU detects that heat exchanger temperature is too high for start up, the start up is delayed to allow the heat exchanger to cool down.

Function diagram *AIRTRONIC* D2 *

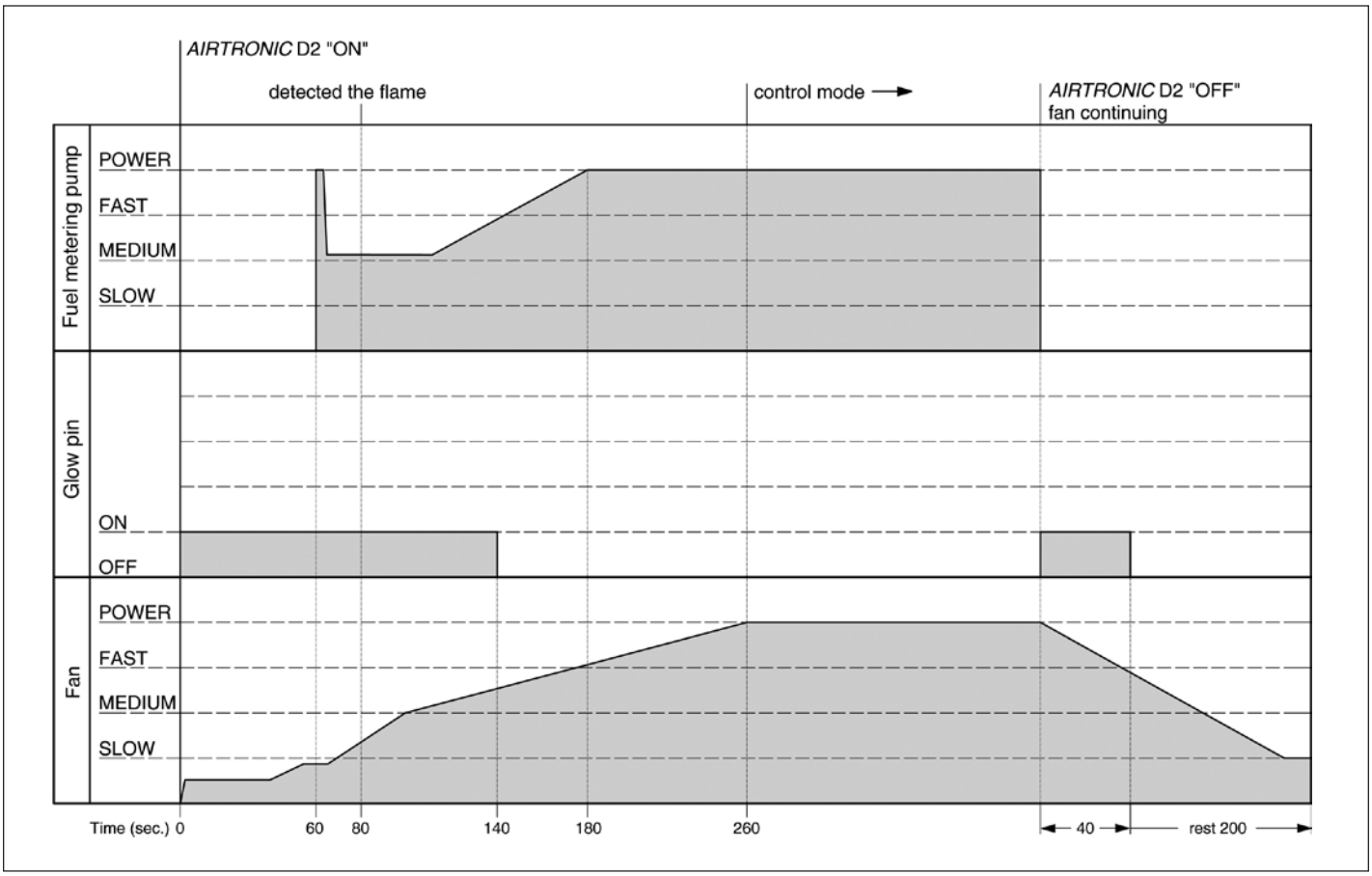

Function diagram *AIRTRONIC* D4 *

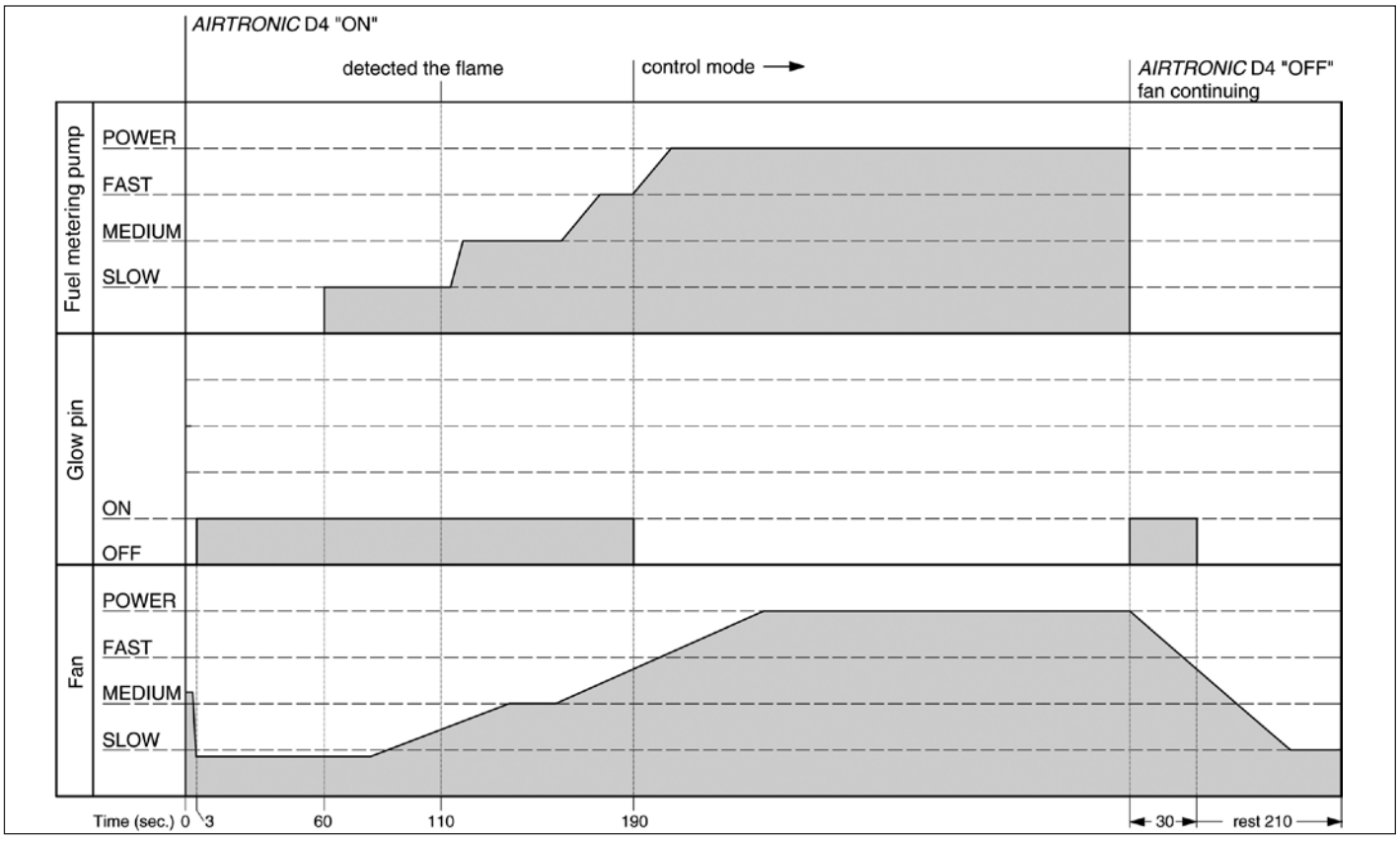

* Timing may vary depending on version of ECU

Schematic *AIRTRONIC* D2 / *AIRTRONIC* D4

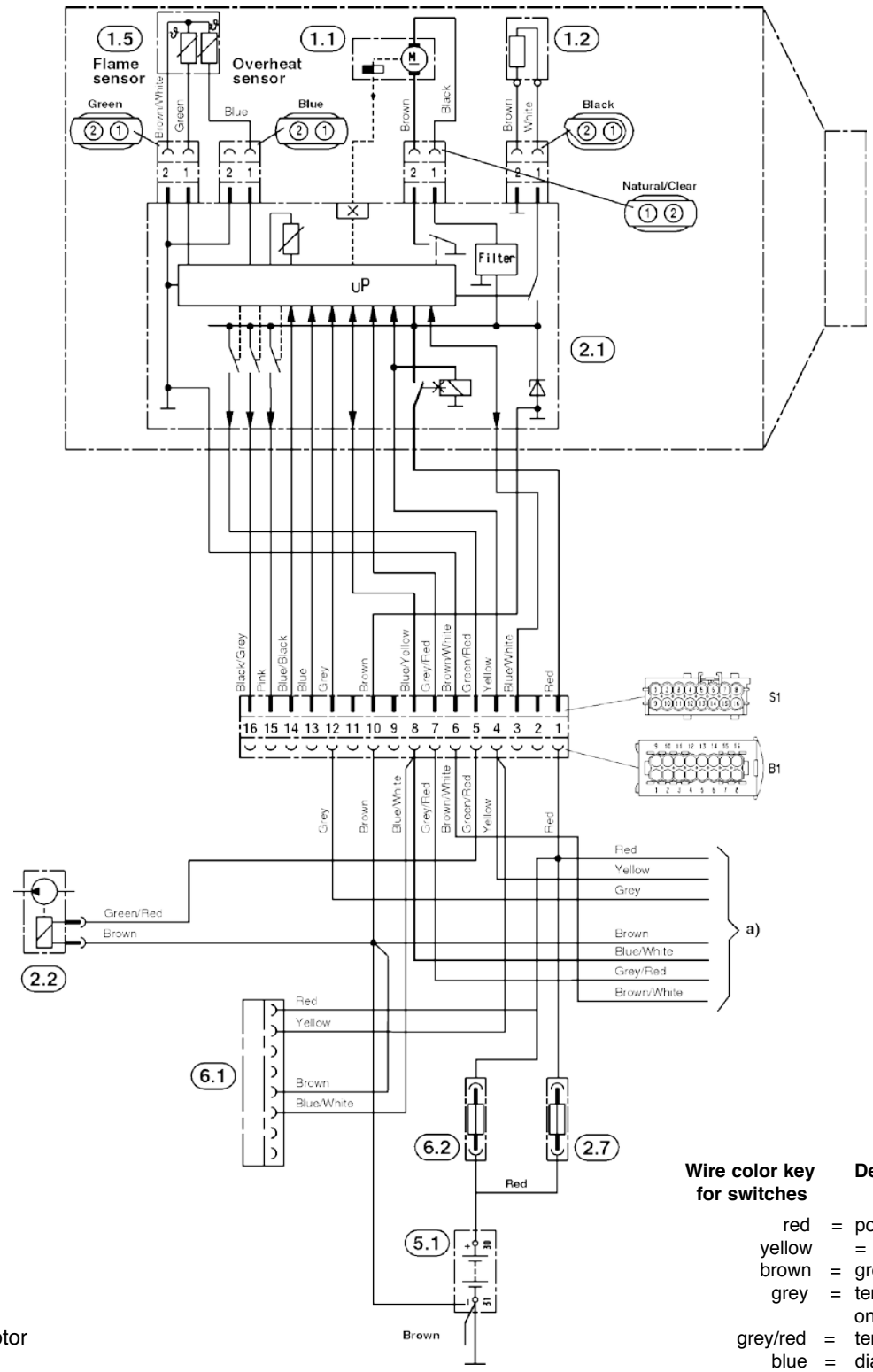

1.1	Blower Motor
1.2	Glow Pin
1.5	Overheat and Flame sensor
2.1	Control Unit
2.2	Fuel Metering Pump
2.7	Main Fuse 12Volt - 20 amp / 24 volt - 10 amp
5.1	Battery
6.1	Diagnostic Pigtail (for connection to Fault code retrieval device)
6.2	5 amp switch fuse - on certain models only

Wire color key for switches		Designation
red	=	power (+)
yellow	=	switch
brown	=	ground (-)
grey	=	temperature sensor on thermostat
grey/red	=	temperature setting
blue	=	diagnostic from heater
blue/white	=	diagnostic from heater
brown/white	=	ground
black	=	to vehicle ignition accessories for continuous operation of heater on 7 day timer

Operation and Function

Thermostat

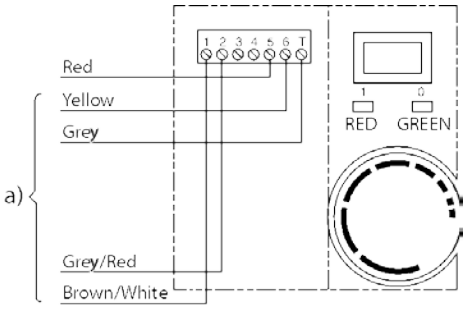

7 Day Timer

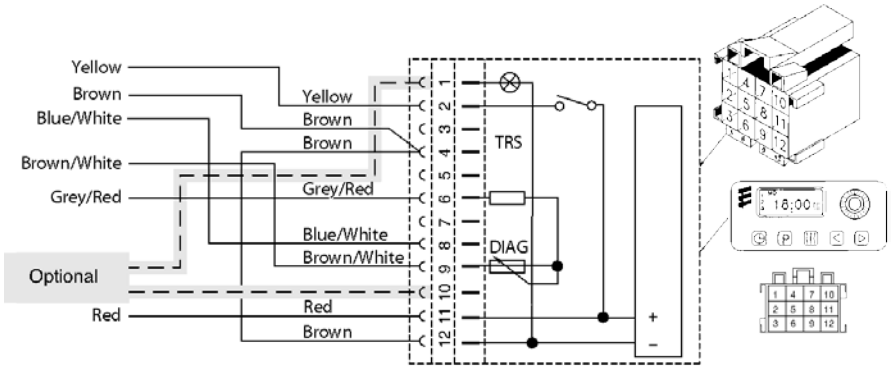

Rheostat

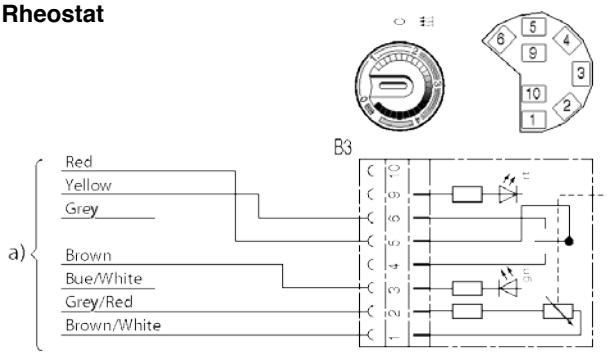

Mini Controller

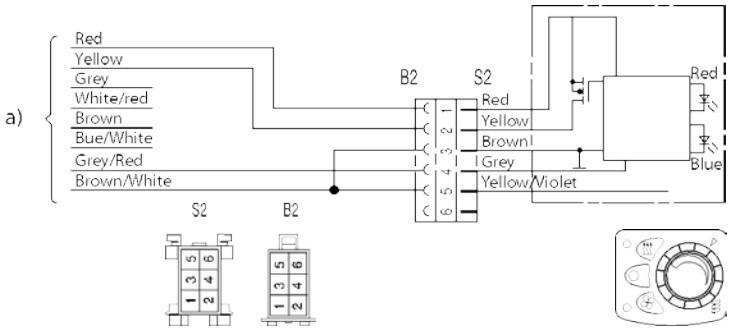

Remote Starter - 7 Day Timer

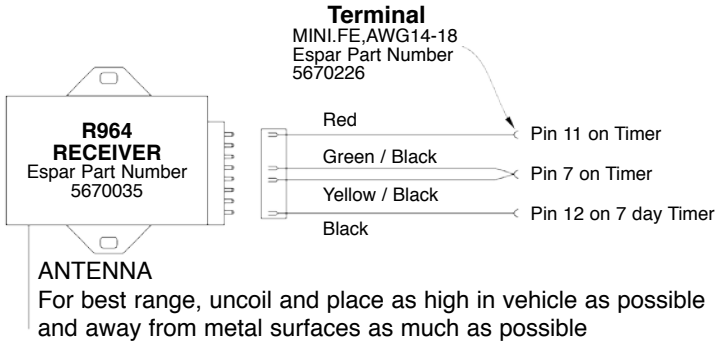

For best range, uncoil and place as high in vehicle as possible and away from metal surfaces as much as possible

7 day timer
P/N: 22 1000 30 36 00 (coolant)
P/N: 22 1000 30 40 00 (air)
Remote A - green wire ——┐
Remote B - yellow wire——┘ pin 7 on timer
Power - red wire pin 11 on timer
Ground - black wire pin 4 or pin 12 on timer

Remote Starter - Programmable Timer, Mini Timer, Thermostart & Rheostat

and Use remote Starter Kit 12 Volt: **P/N 20 2900 70 01 56**

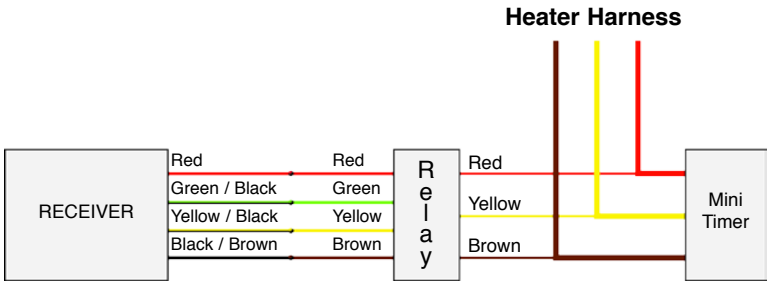

1. Remove fuses on heater's harness or disconnect from battery.
2. Connect four wires between relay and receiver as shown.
3. Connect tree wires from relay to harness:
   - Red wire to fused red wire on heater's harness going to control device.
   - Brown wire to negative wire on heater's harness (do not ground to chassis if vehicle has switch on battery "-")
   - Yellow wire of relay to yellow wire on heater's harness.
4. Replace fuses.

Operation and Function

External Temperature Sensor

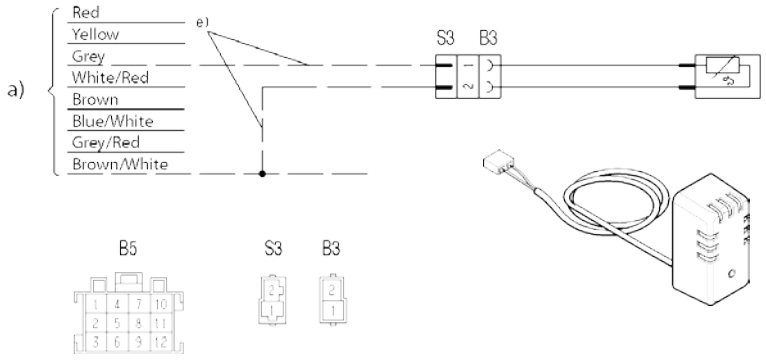

Digi Controller

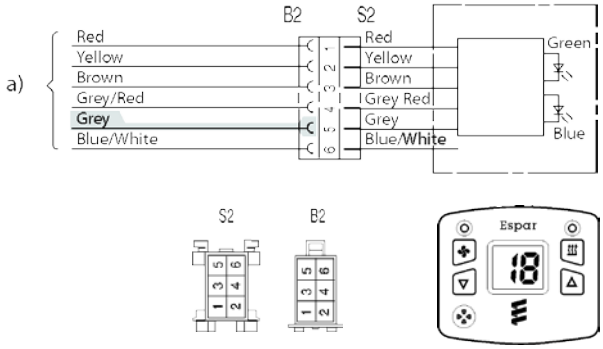

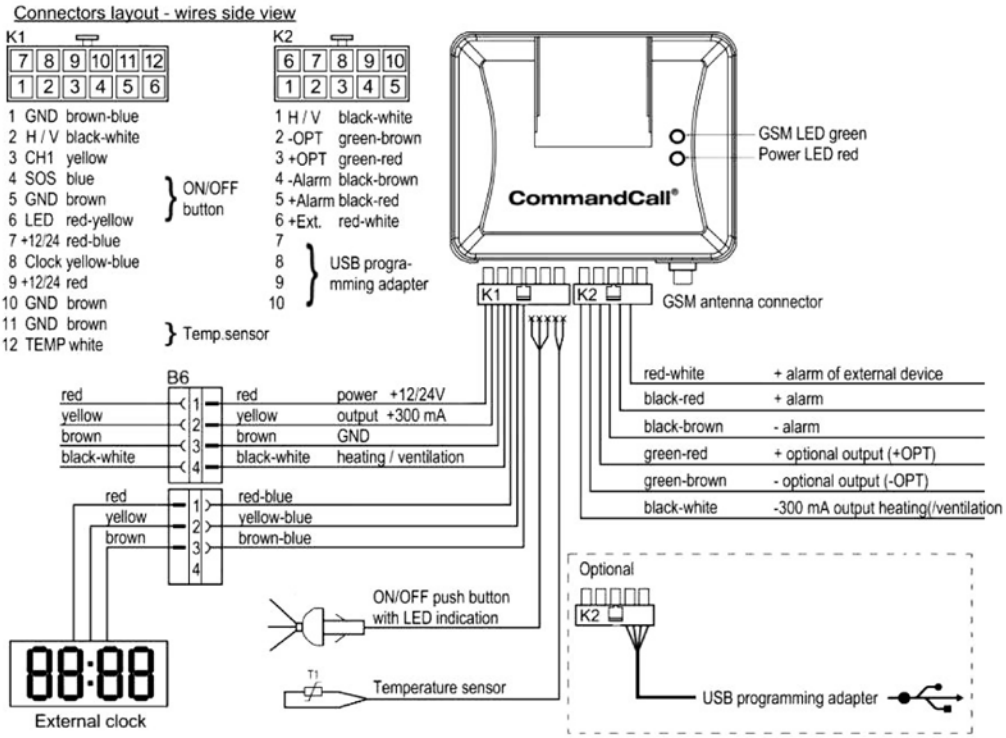

High Altitude Compensator

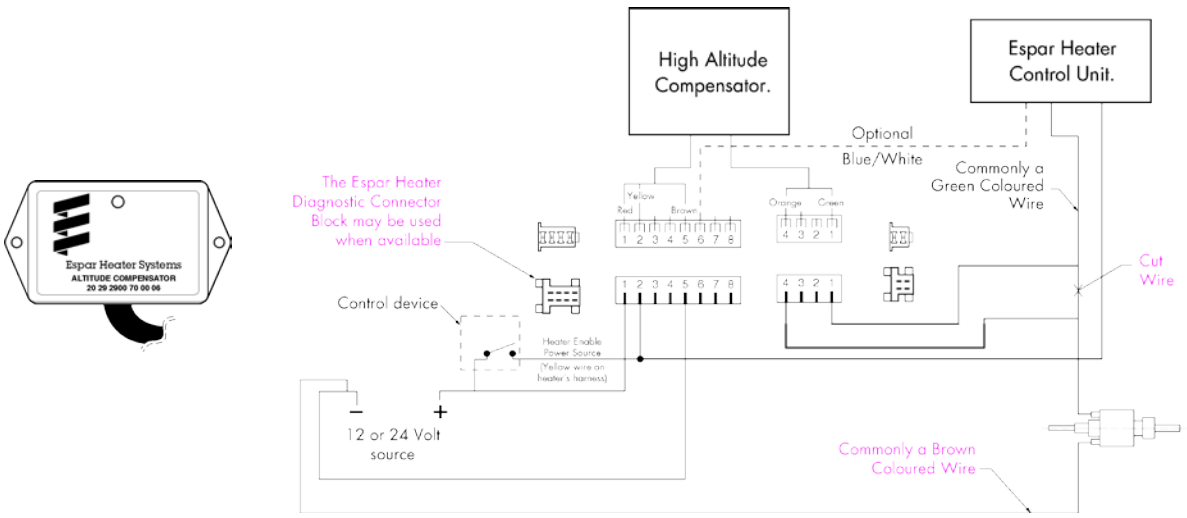

Maintenance

Recommended Periodic Maintenance

- Remove the **glow pin** and inspect for carbon build up. Clean or replace.
- Remove the **glow pin screen** and inspect for carbon build up. Replace.
- Make sure **vent hole** is not clogged.
- Inspect the **ducting**, the air intake screen and air outlet for restriction or blockage.
- Inspect **combustion air intake and exhaust** for blockage.
- Operate your heater for a minimum of 20 minutes each month.
- **Maintain your batteries** and all electrical connections in good condition. With insufficient power the heater will not start. Low and high voltage cutouts will shut the heater down automatically.
- Use **fuel suitable for the climate** (see fuel supplier recomendations). Blending used engine oil with diesel fuel is not permitted.

Basic Troubleshooting

Check List:

What happens when the heater is switched on and ....

Heater does not ignite

1 Blower motor does not run

Check:
- Fuse in power harness.
- Power to control unit.
- Power to and from switch.
- Electrical connections.

2 Blower motor runs approximately 20 seconds and then shuts off

Check:
- Ensure voltage at control unit remains above 12V (or 24V) during start up with glow pin circuit on.

3 Blower motor runs/fuel metering pump starts and then shuts down after two start up attempts

Check:
- Ventilation hole and glow pin screen.
- Fuel lines and fuel filter.
- Fuel quantity. Pg. 29
- Combustion air or exhaust tube blockage.

4 Blower motor runs/no fuel metering pump

Check:
- For electrical pulses at fuel metering pump.
- If pump is frozen.
- Blocked fuel line.

Heater ignites

1 Shuts down at random

Check:
- Possible overheat.
- Control unit input voltage.

2 Heater smokes and carbons up

Check:
- Exhaust pipe blocked.
- Combustion air intake blocked.
- Exhaust entering combustion air intake pipe.
- Short cycling, rapid on/off operation.
- Fuel system.
- Fuel metering pump position and quantity.
- Motor rpm.

Self Diagnostics

The heater is equipped with self diagnostic capabilities. The most powerful diagnostic option is the ISO adapter along with EDiTH software. The conventional "fault code retrieval devise" (P/N: 20 2900 70 5020) and the Digi Diagnostic (P/N: 20 2800 70 1002) are more convenient options as they can be carried in your pocket and a Personal computer is not needed.

The diagnostic devises will be able to perform the functions below.

1. Access the current fault which is affecting the heater.
2. Access the five previous faults which affected the heater.
3. Clear the fault memory to erase previous fault history.
4. Unlock “lockout features” which exist for some control units.
5. Start heater.

Equipment Face and Controls

Symbols that are seen on the display face are as follows:

AF — Actual fault.

F1-F5 — Up to five stored faults can be accessed. The AF and F1 are the same.

This sign is displayed when the heater is in operation.

dIA — The word (dIA) ‘gnostic will come on when the unit is connected.

000 — Three digit diagnostic fault code number.

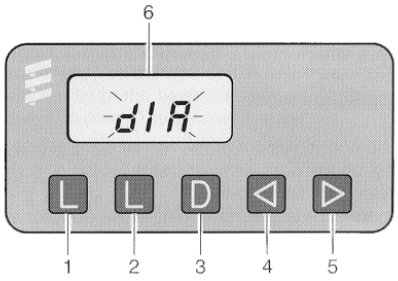

1. delete fault memory
2. delete fault memory
3. switch heater on / off, request diagnostic fault codes
4. backwards, fault F5 - F1, AF
5. forward AF, F1 - F5
6. display

- Switch the fault code retrieval device on and wait 10 seconds.
- Press the "D" button.
- Wait 3-5 seconds for the current fault code to appear (AF).
- To review the previous faults use the arrow buttons (F1= Most Recent, F5= Oldest).
- Consult the fault code chart for code number descriptions.
- To erase the faults that are in memory press both "L" keys at the same time for 5 seconds. This will also unlock the control unit in the case of an operational lockout.

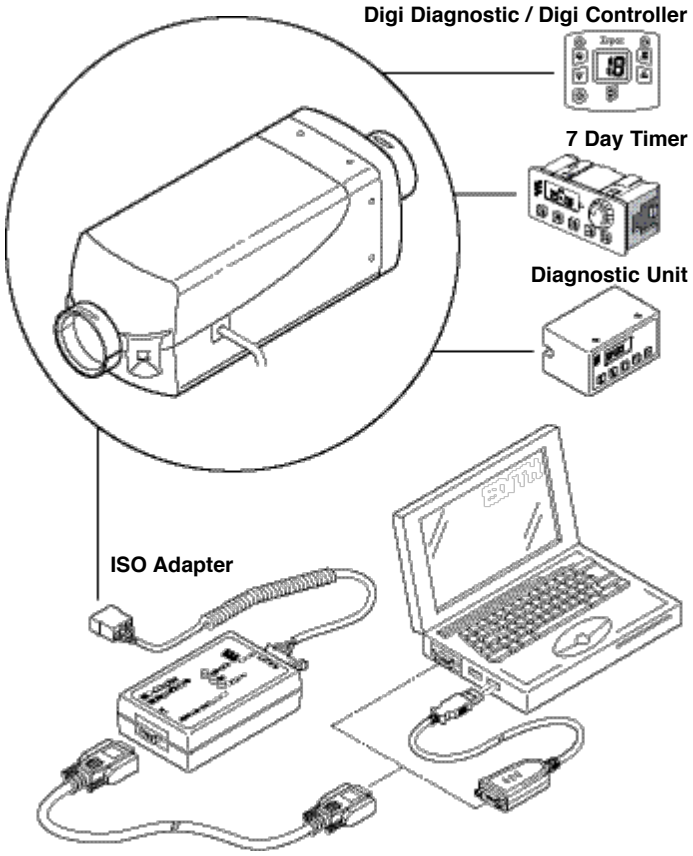

Note: A diagnostic connection is present in most harnesses. If a connection is not present an adapter must be connected in order to retrieve fault codes (P/N: 22 1000 31 8600).

Note: If there are no heater faults, the heater will go through a normal start cycle and regulate based on thermostat setting.

See schematic pg. 19

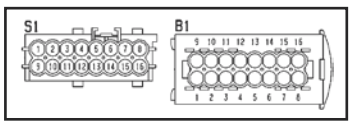

Fault Code		Fault Description Causes / Repair
---	Diagnosis not possible	• Check electrical connections. • Diagnostic Devise defective. • Test ECU and replace if necessary.
000	Normal Operation	
004	Short circuit at external blower output	**Function normally not used in North America** • Check for short circuit between pin 16 (B1) and appropriate relay. • If there is no short, test ECU and replace if necessary.
005	Short circuit at security system output	**Function normally not used in North America** • Check for short circuit between pin 15 (B1) and appropriate relay or security system input. • If there is no short, test ECU and replace if necessary.
006°	Altitude sensor fault	• Check if sensor is connected properly. (Only applicable with “H-kit” heaters°) • Connect sensor to EDITH for further diagnosis.
009	ADR – shutdown	**Optional safety shutdown** **Function normally not used in North America** • Signal at pin 13 (S1) changed from (+) to (-) or a (+) signal is detected at pin 14 (S1). • If above does not resolve problem test ECU and replace if necessary.
010	Overvoltage	**Overvoltage detected for at least 20 seconds without interruption.** • Check voltage between pin 1 (red wire) and 10 (brown wire) (B1). Voltage here should be the same as the battery. • Voltage must be less then 16 volts for 12 volt heater. • Voltage must be less then 32 volts for 24 volt heater. • Check if battery charger is connected. If so disconnect charger. • Check vehicle charging system. If there is a problem correct as necessary.
011	Undervoltage	**Undervoltage detected for at least 20 seconds without interruption.** • Check voltage between pin 1 (red wire) and 10 (brown wire) (B1). Voltage here should be the same as the battery. • If voltage is lower check fuses and wiring for damage. Check battery connections for corrosion and proper contact. • Voltage must be more then 10 volts for 12 volt heater. • Voltage must be more then 21 volts for 24 volt heater. • Check voltage before and after heater is started. • Check if fuses, connections and wiring are in good condition. • Check vehicle charging system. If there is a problem correct as necessary.
012	Overheat at overheat sensor	• Check air ducting for excessive restriction or blockage. • Check if ducting length is within specification. (Ref. to product catalogue) • Measure resistance of both the overheat sensor and flame sensor to see if they are within specification. (pg. 29) • Perform Fuel Quantity test (pg. 29)
013	Overheat at flame sensor	• Check air ducting for excessive restriction or blockage. • Check if ducting length is within specification. (Ref. to product catalogue) • Measure resistance of both the flame sensor and overheat sensor to see if they are within specification. (pg. 29) • Perform fuel quantity test. (pg. 29)

Fault Code		Fault Description Causes / Repair
014	Excessive temperature difference between overheat and flame sensor	• Check if sensor is mounted properly. • Measure resistance of flame sensor and overheat sensor to see if it is within specification. (pg. 29) • Perform fuel quantity test. (pg. 29) • Measure resistance of both the flame sensor and overheat sensor to see if they are within specification. (pg. 29)
015	ECU locked	**Occurs after Airtronic is switched on after 017 has been registered.** • Unlock heater with an Espar diagnostic devise (EDITH, 7 day timer…) • Check troubleshooting suggestions for 012, 013 and 014.
017	Overheat sensor -Maximum temperature reached	• The ECU is locked because the temperature threshold has been exceeded and the ECU did not register fault code 012 and / or 013. • 015 will be displayed if unit is turned off after a 017. • Test ECU and replace if necessary.
018°	Ignition energy too low (only applicable with “H-Kit” heaters°)	• Test glow pin as per fault code 20.
019*	Ignition energy too low	
020	Open circuit – Glow pin	• Check glow pin resistance at 20 deg C • 12 volt heater: 0.42ohms - 0.7ohms • 24 volt heater: 1.2 ohms - 2.0 ohms • Check glow pin harness for damage, if it is routed and connected properly. • Check harness for continuity. • Test ECU and replace if necessary.
021	Short circuit – Glow pin	
022*	Short circuit after battery voltage – Glow pin	
025*	Diagnostic cable short circuit after battery voltage	• Fault Code(s) can not be displayed until fault has been corrected. • Check for damage to Diagnostic cable. • Heater is not compatible with diagnostic devise being used. • Check if diagnostic devise is working properly. • Check blower wiring and connections for proper routing and damage. • Check leads for continuity. • Test ECU and replace if necessary.
031	Circuit interrupted – Blower motor	• Check wiring for short circuit. • Apply appropriate voltage to blower and check current draw (8V for 12V heater 18V for 24V heater) Make sure power supply has at least 20amp short circuit resistance. If current is less then 6.5 amps test ECU and replace if necessary. If current is more then 6.5 amps replace blower.
032	Short circuit – Blower motor	
033	Speed differential, no rotation, short circuit after negative	**Motor speed varies from specification by more then 10% for longer then 30 seconds.** • Use non contact RPM meter to measure speed of blower (pg. 30) • If RPM is too low, check for restrictions or blockage, if there are no restrictions check remedies for fault code 032. • If RPM is too high check if magnet in impeller is mounted properly, if magnet is ok test RPM sensor if accurate. (Confirm RPM reading using EDITH software.) • Check for short circuit.
034*	Short circuit – Blower motor	• Check blower wiring and connections for proper routing and damage. • Check leads for continuity. • Test ECU and replace if necessary.

Fault Code		Fault Description Causes / Repair
047	Short circuit – Fuel metering pump	• Disconnect connector from FMP, restart heater, if 048 is displayed, FMP is defective. • If 047 is still displayed disconnect harness from the heater and look for short circuit from pin 5 (B1) to negative (pin 10) • If there is no short circuit test ECU and replace if necessary.
048	Open circuit – Fuel metering pump	• Disconnect fuel pump wiring and check if resistance is within specifications (pg. 30) If good reconnect wiring and check resistance from connector (B1) pin 5 and pin 10. • If ok test ECU and replace if necessary.
049*	Short circuit after battery voltage - Metering pump	• Check wiring and connections for proper routing and damage. • Check leads for continuity. • Test ECU and replace if necessary.
050	Too many start attempts	**ECU is locked after too many start attempts (max. 255)** • Check fault codes in memory before unlocking ECU. • Fallow repair advice of codes in memory. • Unlock ECU with a diagnostic devise.
051	Faulty flame recognition	• If temperature of flame sensor is greater then 70°C (158°F) when starting up the heater, the start attempt is delayed and blower will operate for a maximum of 15 minutes to cool down the flame sensor. • If temperature does not fall below 70°C (158°F) within 15 min 051 will occur. • If temperature decreases to an acceptable level the heater will attempt to start. • Check resistance of Flame sensor. (pg. 29)
052	No flame detected – Start phase	• If there is actually a flame but it is not detected, check resistance of the flame sensor. (pg. 29) • If there is no flame: • Check combustion air intake and exhaust lines for interference. • Check glow pin screen (should be replaced yearly) and ventilation hole (should be inspected when screen is replaced) • Perform Fuel Quantity Test (pg. 29)
	Flame cutout during:	**Heater has started successfully but flame has extinguished.**
053	Power/ Bust mode	• Check combustion air intake and exhaust.
054	High mode	• Check fuel supply perform fuel quantity test. (pg. 29)
055	Medium mode	• Inspect fuel lines for bubble formation.
056	Low mode	• Check if appropriate grade of fuel is being used according to temperature. (pg. 29)
057°	Start phase (only applicable with “H-Kit” heaters°)	• Check if flame sensor resistance is within specification and mounted properly. (pg. 29) • Test ECU and replace if necessary.
060	Circuit interrupted – external temperature sensor	**Sensor detects a temperature beyond it’s range.** • Measure resistance at pins 6 and 12. (B1) • The circuit would be detected as open if the resistance is greater then 3k ohms (7175 ohms•) • Test ECU and replace if necessary.
061	Short circuit – external temperature sensor	• Measure resistance at pins 6 and 12. (B1) • A short circuit will be detected if the resistance is less then 800 ohms (486 ohms•) • Test ECU and replace if necessary.

Fault Code		Fault Description Causes / Repair
062	Circuit Interruption – Control switch	**Temperature setting out of resistance range** **Heater runs in High mode only** • Check resistance between pins 6 and 7 at B1. (Test will only work with thermostat and rheostat. Resistance check will not work with Mini controller or Digi controler) Resistance should be between 1740 – 2180 ohms. • Mini controller or Digi controller should be tested while heater is con nected to EDITH. • If resistance is ok test ECU and replace if necessary.
063	Short circuit - Control switch	**Short circuit is detected between pins 6 and 7 after heater has started.** • If short occurred before heater is started heater will be in ventilation mode. • Check wiring connected to pins 6 and 7 for a short. • If there is a switch connected to pins 6 and 7 test if switch is work ing properly. • Disconnect switch. If 063 still appears test ECU and replace if necessary. • Short will be registered between pins 6 and 7 less then 800 ohms (486 ohms*). • Normal value is 1740 – 2180 ohms.
064	Open circuit – flame sensor	• Disconnect flame sensor and check if resistance is within specification. (Green connector. Pg. 29) • Open circuit detected at 3k ohms (7175 ohms*) • If resistance is ok test ECU and replace if necessary.
065	Short circuit – flame sensor	• Disconnect flame sensor (green connector) and scan for fault codes again. • If 064 comes up replace combo sensor. • If 065 comes up, test ECU and replace if necessary. • Short circuit resistance is less then 500 ohms (486 ohms*)
071	Open circuit – overheat sensor	• Disconnect both the flame and overheat sensor from the ECU. • Measure resistance between the blue and brown/white wire. (Pg. 29) • The ECU will record an open circuit if the resistance is greater then 1600k ohms (223k ohms*)
072	Short circuit- overheat sensor	• Disconnect both the flame and overheat sensor from the ECU and scan for fault codes again. • If 071 comes up replace combo sensor. • If fault 072 is still displayed test ECU and replace if necessary. • Short circuit resistance is less then 95 ohms (183 ohms*)
074*	Overheat threshold not detected	• Test ECU and replace if necessary.
090	Control Unit defect	• Test ECU and replace if necessary.
091	External voltage interference	**Fault due to inconsistent voltage** • Inspect power system. (Battery, Battery charger, Alternator) • Check the fuses, the supply cables, the negative connections and the positive support point on the battery for corrosion and correct contact.
092 093* 094 095*	Internal Memory Error	again. Disconnect power for 10 seconds. Reconnect and test • Test ECU and replace if necessary.

Fault Code		Fault Description Causes / Repair
096	Internal temperature sensor defect.	• Replace ECU or install an external temperature sensor.
097	Control Unit defect	• Replace Control Unit.
098* 099*	Short term Voltage drop.	**Voltage less then 5 - 6 volt (for 12 volt) or less then 7 - 8 volt (for 24 volt).** • Check the fuses, the supply cables, the negative connections and the positive support point on the battery for corrosion and correct contact. • Check if power supply can provide the appropriate amount of current while heater is running. (At least 10 amp supply recommended.) Transistor error in control box. • Check lead harness of the external components for continuity, has been correctly laid and check for damage. • Test ECU and replace if necessary. **Transistor error in control box.** • Check lead harness of the external components for continuity, has been correctly laid and check for damage. • Test ECU and replace if necessary.

High Altitude Sensor Fault Code		Fault Description Causes / Repair
0	No faults.	
11	Communication Lost.	• Check wiring and connections
12	No altitude adjustment.	• Use heater that is compatible with this high altitude sensor or use a different high altitude devise (Pg. 3)
13	Air pressure sensor fault.	• Replace the air pressure sensor.

* Codes are only applicable for new style ECU's.
To date new style ECU's wiring is wrapped with tape.
Old style ECU's are bundled in PVC.

° Codes and comments apply to ECU's with integrated high altitude compatibilities. (Ref. pg. 3)

• Resistance values apply to old style ECU's. Ref. to *
for description of difference between old and new style ECU's.

Maintenance / Troubleshooting / Repair

TROUBLESHOOTING FOR AIRTRONIC 2/4/ HEATERS

"No start" and "Heater Stops" conditions
Use these recommendations in conjunction with Fault Code List

#	Description of the problem	Possible reason and method of repair*
1	Absolutely nothing happens when the heater is turned on 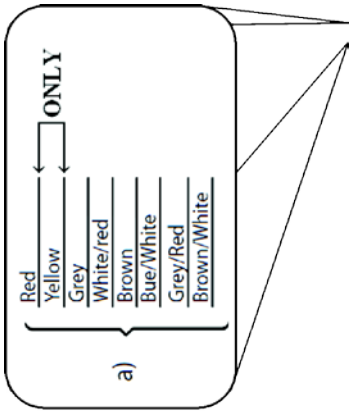 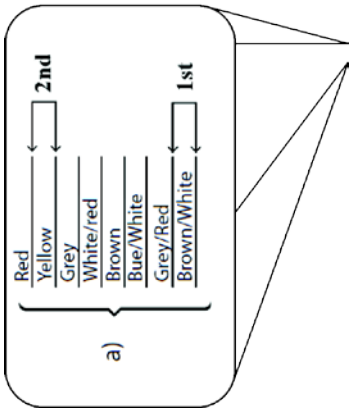	1. Check voltage on heater's harness on the heater's side (pin # 1 and 10 on Airtronic connector). Turn the heater ON and make sure that the voltage is still OK. Repair harness and connections if necessary. 2. If the voltage is OK, than try to start the heater by connecting together red and yellow wires on control branch of the heater's harness. Make sure that you have +12 or +24 volts on the red wire on the control branch. 3. If the voltage is OK but the heater still does not start even if red and yellow wires are connected to each other, then the most likely ECU is locked, bad, or one of the startup self tests failed. Use one of diagnostic tools to retrieve fault codes from heater's memory and unlock ECU if it is locked. Follow heater's manual for the fault codes description and repair methods. Computerized diagnostic is advised for all kinds if troubleshooting of Airtronic heaters. 4. If you troubleshoot your own heater and diagnostic tools are unavailable, the following information may help (please note that the features below are determined by software in heater's ECU and may be different in some revisions of heaters): In the event that a heater is not locked out, but simply fails one of the start up tests. The heater will not run in 'Heat' mode, but may however run in 'Vent' mode. If the Mini-controller or Digi – controller is not available, vent mode can be accessed by 'jumping' the grey/red wire to the brown/white wire, then 'jumping' the red wire to yellow wire (order is important). If blower starts up and runs, then ECU is not locked. Otherwise it may or may not be locked. If heater is able to start in ventilation mode, but can not run in heating mode: -check FMP for open or short circuit; heck roll-over or impact switch for open circuit (if installed); -check Glow pin for open or short circuit; -check overheat sensor for open circuit; If heater does not work in either heat and vent modes: -check flame sensor for open or short circuit; -check overheat sensor for short circuit; *Resistance values for the glow pin, sensors and fuel pump are listed in maintenance / Troubleshooting. Resistance of the fuel pump must be measured at the 16 pin connector with disconnected heater. *Resistance values for the glow pin, sensors and fuel pump are listed in maintenance / Troubleshooting. Resistance of the fuel pump must be measured at the 16 pin connector with disconnected heater.
2	Being turned on, heater turns blower a few times, FMP and ECU's relay may click one time but heater would not make an attempt to start.	1. Bad electrical connections. Check voltage like described in case #1. 2. Start-up self test failed. Retrieve fault codes from heater's memory using Diagnostic tool or EDiTH, refer to the heater's manual for the description and repair methods.
3	Heater switches into shut-down phase 20-25 seconds after being turned on (the most likely, fault code 11 found in memory)	Check voltage on heater's harness on the heater's side (pins 1 and 10 on Airtronic connector). Turn the heater ON and make sure that the voltage is still OK. Repair harness and connections if necessary.
4	Being turned on, heater just blows cold air, never stops and never performs a start attempt. No fault code record ed.	1. Was "Ventilation" button pressed instead of "Heat"? 2. Replace combo Sensor. 3. Replace ECU if necessary.
5	Heater makes two attempts to start with no success and then stops completely. No smoke comes from the exhaust pipe, some smoke can be seen between the exhaust pipe and heat exchanger.	1. Check if exhaust pipe is not plugged with ice. Reroute it if this is the case for not having it to be U-shaped. 2. Check combustion air intake pipe. If the exhaust and combustion air intake pipes are OK. see case #6 below.

6	Heater makes two attempts to start, may smoke for a while and then it stops.	1. Do the fuel quantity check as described in manual, if the amount of fuel is insufficient, than check the fuel pick-up pipe, fuel lines and connections, fuel filter on the pump, replace the filter or pump if necessary. 2. Check the glow pin, clean ventilation hole above the screen in the glow pin chamber and replace atomizing screen. 3. If necessary, take the heater apart, clean combustion tube (including it's all air ways) and the heat exchanger. If internal combustion chamber area is badly car boned or has a ceramic-like build up behind the ring wall, replace the flame tube. Refer to instructions for cleaning heater with kerosene, which sometimes helps to avoid taking the heater apart for cleaning.
7	Heater makes two attempts to start, then stops. Both times it sounds like the ignition takes place and then com bustion process stops together with the fuel metering pump. Usually no smoke comes from the exhaust pipe just like when the heater starts normally.	1. The heater ignited but the flame was not detected. Check and replace combo sensor. 2. Replace ECU if combo sensor was good.
8	Heater ignites normally, goes into boost mode, then switches to stand-by mode, blower is slowly spinning but the heater never restarts. No fault code recorded.	1. Using EDiTH, check setpoint for temperature and current air temperature. Replace part which works improperly. Swap minicontroller if do not have EDiTH; 2. If minicontroller OK, install external temperature sensor or replace ECU.
9	Heater ignites normally, but often stops (codes 52 - 56 found in memory)	1. Check fuel lines for gaps in connections inside connection pieces. 2. If the heater stops only when the vehicle is in motion, reroute combustion air intake and exhaust pipes, or bend their ends toward to the rear of the vehicle.

*To avoid inefficient expenses, it is strongly recommended to have the heater diagnosed by specialist before replacing expensive parts.

Warning: Do not skip trouble shooting steps replacing ECU before all other tests are done. 99% of repaired heaters do not need a new ECU.

Fuel Quantity Test

The fuel quantity should be tested if the heater has difficulty starting or maintaining a flame.

Preparation

- Detach the fuel line from the *AIRTRONIC.*
- Insert the fuel line into a graduated cylinder 10ml.
- Switch the *AIRTRONIC* on. Once the FMP comes on allow the fuel system to bleed air out for approximately 60 seconds.
- Switch the *AIRTRONIC* off and empty the graduated cylinder.

Measurement

- Switch the *AIRTRONIC* on.
- The fuel is pumped approx. 60 seconds after switching on.
- Hold the fuel line in the graduated cylinder level with the glow pin while fuel is being delivered.
- The pump will stop automatically after delivering fuel for 90 seconds (110 seconds for *AIRTRONIC* 4).
- Once fuel pump stops, switch off the heater.

Evaluation

- Read out the quantity of fuel in measuring glass.
- Fuel quantity should be between:
  3.5 ml and 4.3 ml. on *AIRTRONIC* D2
  5.0 ml and 6.0 ml. on *AIRTRONIC* D4
  6.8 ml and 7.6 ml. on AIRTRONIC B4
- Replace the fuel metering pump if the fuel quantity is above specified value.
  If measured fuel quantity is insufficient:
  – Check the filter in the fuel pump.
  – Check that the fuel lines are correctly routed.
  – Check that the fuel lines don't leak.
  – Check and tighten hose connections.
  – Does fuel withdrawal comply with the data in the technical description.

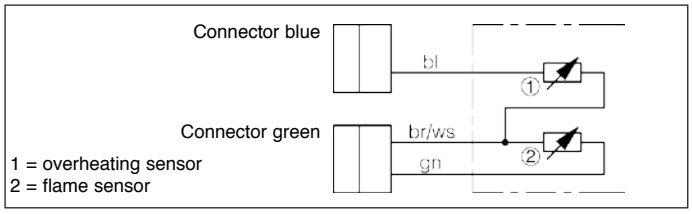

Note: The fuel quantity is not affected by voltage variances.

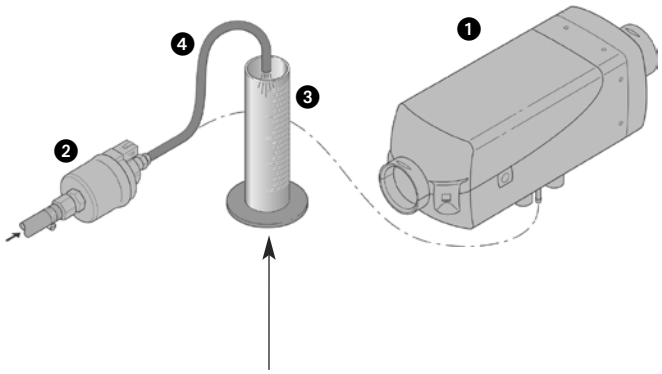

Espar part #: 552 00 04
Graduated Cylinder 10ml

Values for Overheat sensor

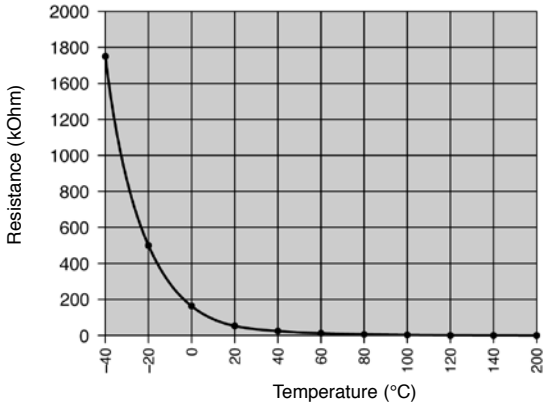

Temperature °C (F°)	Resistance kΩ	min.	max.
-40 (-40)		1597.0	1913.0
-20 (-4)		458.80	533.40
0 (32)		154.70	175.50
20 (68)		59.30	65.84
40 (104)		25.02	28.04
60 (140)		11.56	13.16
80 (176)		5.782	6.678
100 (212)		3.095	3.623
120 (248)		1.757	2.081
140 (284)		1.050	1.256
160 (320)		0.6654	0.792
180 (356)		0.4253	0.5187
200 (392)		0.2857	0.3513

Values for Flame sensor

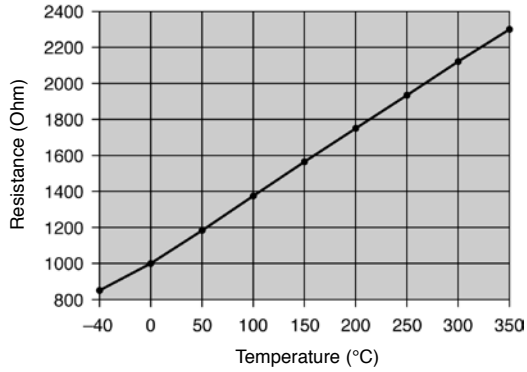

Temperature °C (F°)	Resistance Ω	min.	max.
— 40	842.7	825.9	859.6
— 20	921.6	803.2	940.0
0	1000.0	980.0	1020.0
20	1077.9	1056.4	1099.5
40	1155.4	1132.3	1178.5
60	1232.4	1207.8	1257.1
80	1308.9	1282.8	1335.1
100	1385.1	1357.4	1412.8
120	1460.7	1431.5	1489.9
140	1535.8	1505.1	1566.6
160	1610.5	1578.3	1642.8

Control values

Note: The terms "Boost" and "Power" are used interchangeably through out this manual. The terms refer to the highest level of heat output of the heater.

Motor speed

Test speed for the blower heater

AIRTRONIC **D2 / D2 Camper**
12 volt heater 5000 rpm ±25 % at U = 10.0 volt

AIRTRONIC **D2**
24 volt heater 5000 rpm ±25 % at U = 18.0 volt

AIRTRONIC **M B4 / D4 / D3 Camper / D4 Camper**
12 volt heater 4400 rpm ±25 % at U = 10.0 volt

AIRTRONIC **M D4**
24 volt heater 4400 rpm ±25 % at U = 18.5 volt

AIRTRONIC **M D4S / D4 Camper plus**
12 volt heater 4400 rpm ±25 % at U = 10.5 volt

AIRTRONIC **M D4S**
24 volt heater 4400 rpm ±25 % at U = 19.0 volt

Control stage	***AIRTRONIC*** **D2**	***AIRTRONIC*** **D4**
• Power	4800 U/min ± 140 rpm	4400 U/min ± 130 rpm
• Fast	4000 U/min ± 120 rpm	3500 U/min ± 100 rpm
• Medium	2800 U/min ± 80 rpm	2600 U/min ± 80 rpm
• Slow	2000 U/min ± 60 rpm	1600 U/min ± 50 rpm
• Adjustment		
- in circulation mode with temperature sensor, internal	600 U/min ± 20 rpm	600 U/min ± 20 rpm
- In fresh air mode with temperature sensor, external	0 rpm	0 rpm
• Ventilation	4800 U/min ± 140 rpm	4400 U/min ± 100 rpm

Resistance values

Component	***AIRTRONIC*** **- 12V**	***AIRTRONIC*** **- 24V**
Glow pin	0.42 - 0.7 Ω	1.2 - 2.0 Ω
Fuel metering pump	9.5 ± 0.5 Ω	36 ± 1.8 Ω
Operator control unit set value potentiometer	1750 - 2180 ± 80 Ω	1750 - 2180 ± 80 Ω

Overheat ~60KOhm at room temp

Flame sensor ~1.0KOhm at room temp

Switching value

Component	***AIRTRONIC*** **D2 / D4**
Overheating sensor	140°C - 170°C (284°F - 338°F) measured in the control stage “power” and at a clearance of 300 mm from the hot air outlet

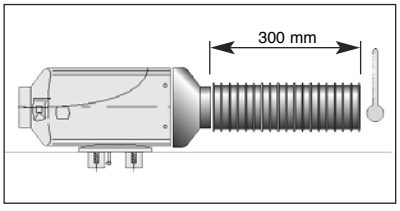

Exhaust value

	AIRTRONIC **D2 / D4**
CO^2 in exhaust in control stage “high”	7.5 -12.5 Vol. %
Soot number as per Bacharach	<4

Repair Instructions

Removing the cover
Removing and checking the control unit
Removing the glow pin
Removing the lining
Removing and checking the overheat and flame sensor
Installing the overheat and flame sensor
Dismantling the heat exchanger
Removing the combustion air blower
Removing the combustion chamber

Note: Remove power from the heater prior to any disassembly by unplugging main connection or removing main fuse.

If gasket was removed during disassembly, replace it when reassembling.
Clean all parts before reassembly and check for any signs of damage, replace where necessary.

Note: The cover must always be removed from the AIRTRONIC for all repair stages. You may have to wait for the device to cool down.

Removing the cover from the *AIRTRONIC*
Unlock both seal plates, lift cover and pull to the front.

The cable harness can exit from the left or right of heater shell.

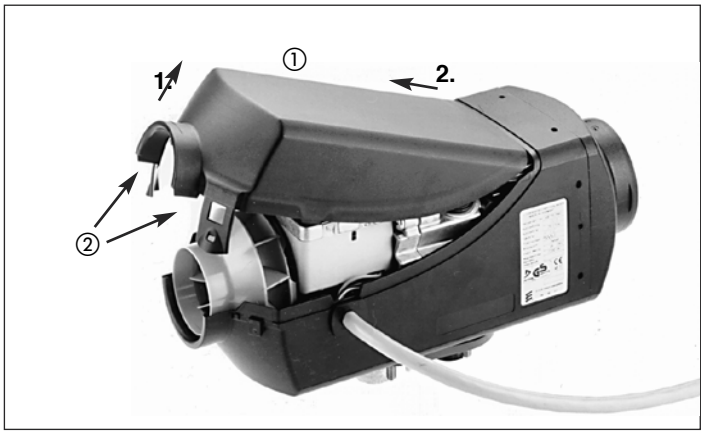

Cover ①
Seal Plates ②

Removing the control unit
Remove the ***AIRTRONIC*** cover.
Unscrew fastening screw, press retaining brackets together, lift out ECU. Unclip the lines from the holder of the control unit (observe the positions of the lines). Remove the bushing (lower part) from the outer case. Disconnect the control unit from the controller. The ECU can now be removed.

Note: When reassembling the ECU, ensure that the lines are correctly clipped in the holder of the ECU, and that the connectors are plugged into the ECU (non-interchangeable).

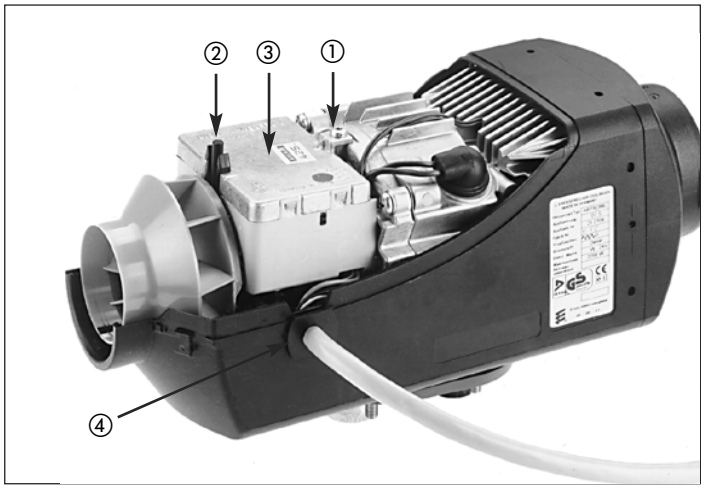

Fastening screw ①
Retaining brackets ②
ECU ③
Bushing ④

Heater Casing Disassembly

- Remove the *AIRTRONIC* cover.
- Remove the ECU.

Disconnect the connector of the glow pin cable harness from the ECU.
Remove the rubber grommet and use the special tool to unscrew the glow pin.
The special tool is included with the glow pin.*
Tighten torque of the glow pin: 6 $^{+0.5}$ Nm (50 in•lb)

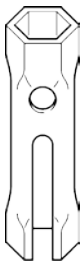

Note: Please check Pg. 37, item 20 for more information.

Note: When the glow pin has been removed, check the screen of the support in installed state for any contamination. The screen must be replaced if the surface is covered with carbon.

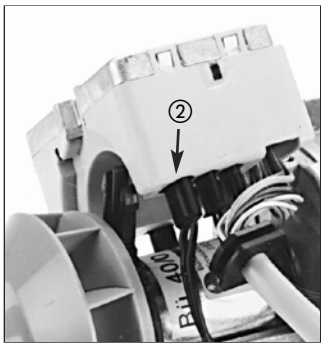

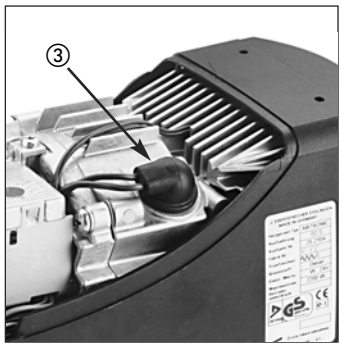

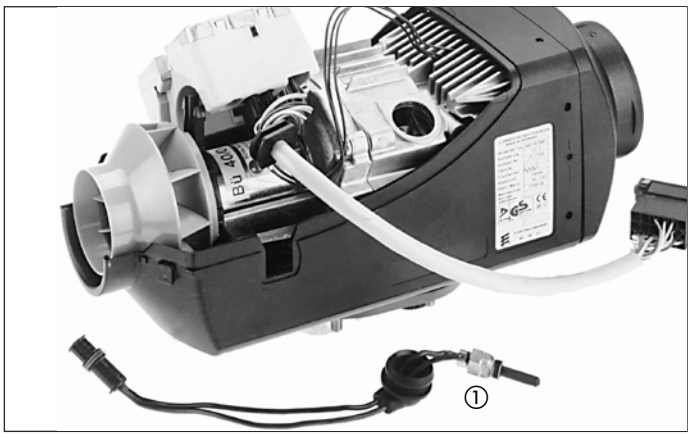

Glow Pin ①
Connector of glow pin cable harness ②
Rubber bushing ③

Removing the screen

Pull the screen out of the support with pointed pliers. Blow out the support with compressed air.
If necessary, carefully pierce with a wire.

The special tool has to be used to install the screen. The special tool is included with the screen. Push the screen onto the special tool, watching the position of the recess. The recess must be positioned at right angles (90°) to the axis of the heater.

Newer screens do not have a recess.

Push the tool with the screen carefully as far as it will go, ensuring that the bore (ø 2.7 mm) for the glow plug ventilation is free. See illustration 1.

In case of the shorter, new style screen (see image B) the position of the screen to the vent hole has no reference. Ensure installation tool is completely seated when installing screen.

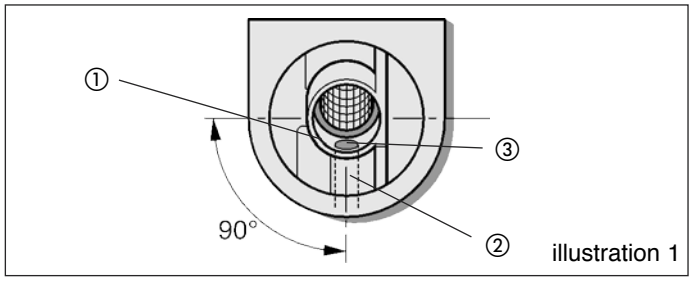

illustration 1

① Screen
② Bore (Ø 2.7 mm) for glow pin ventilation
③ Vent Hole (Can be cleaned with wire)
Allow riveted section to be placed in such a way as to not block the vent more.

Image A

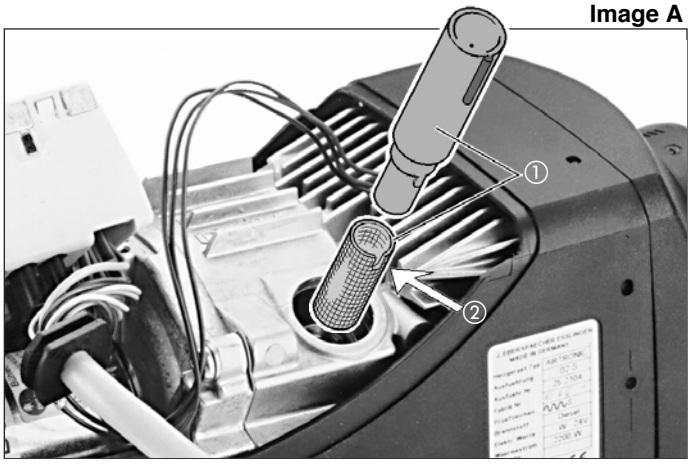

① Special tool
② Position of recess

Image B

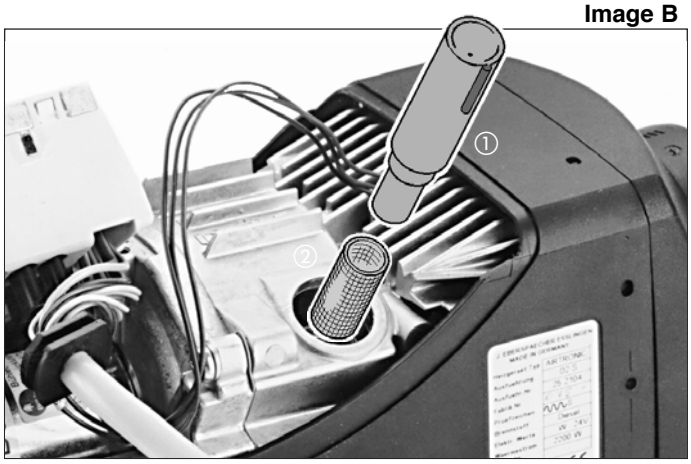

① Special tool
② Screen

Removing the overheat sensor / flame sensor

- Remove the *AIRTRONIC* cover.
- Remove the control unit.

Disconnect both connectors of the overheating / flame sensor cable harness from the ECU.
Unlock clip from sensor.
Remove overheat /flame sensor.

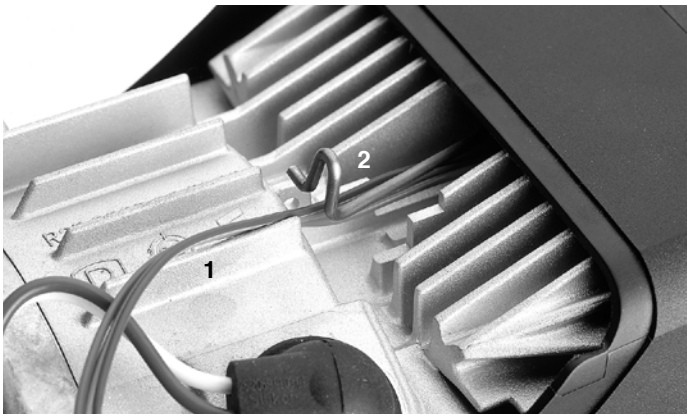

Cable harness for overheat/flame sensor 1
clip 2

Overheat sensor
Check the overheat sensor with a digital multimeter. If the resistance value is outside the set point indicated in the values, on pg. 26 then the sensor must be replaced.

Flame Sensor
Check the flame sensor with a digital multimeter. If the resistance value is outside the set point indicated by the values table on pg. 26, then the sensor must be replaced.

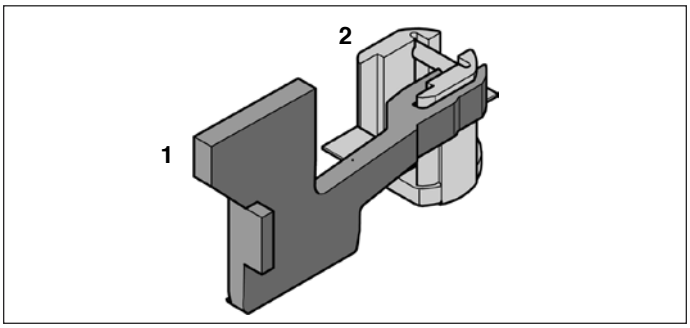

1 Special tool - only for *AIRTRONIC* D2
2 Overheat sensor / flame sensor

Installing the overheat / flame sensor

For *AIRTRONIC* D2 (Assembly using purpose made tool) mount the special tool on the sensor.
Place the sensor on the heat exchanger using the special tool. The special tool slides on the heat exchanger until the sensor meets the collar (installation site of the sensor).

Lock the sensor in place and remove the purpose made tool. It is then vital to check that the sensor sits flat on the heat exchanger. If necessary use a mirror and lamp to aid correct assembly.
Route the cable harness sensor along the clip eyelet to the control unit and connect.

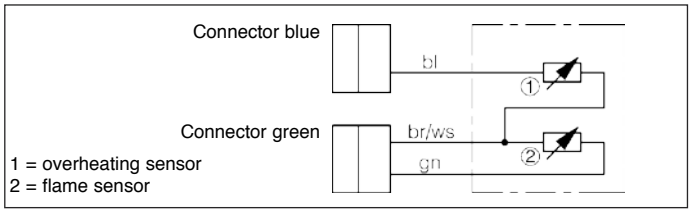

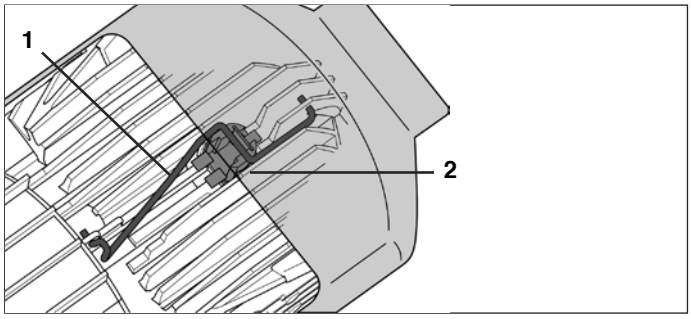

1 Clip
2 Overheat sensor / flame sensor

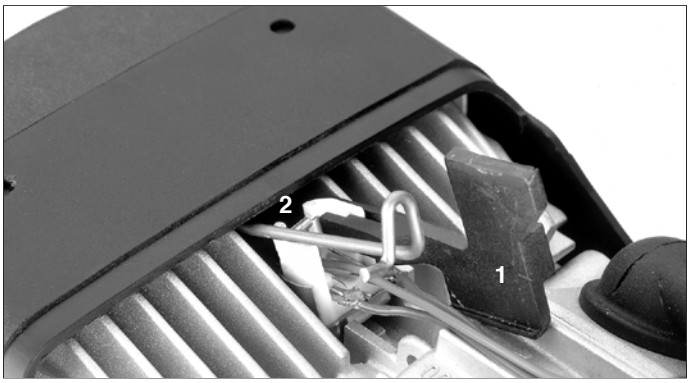

1 Special tool - only for *AIRTRONIC* D2
2 Overheat sensor / flame sensor

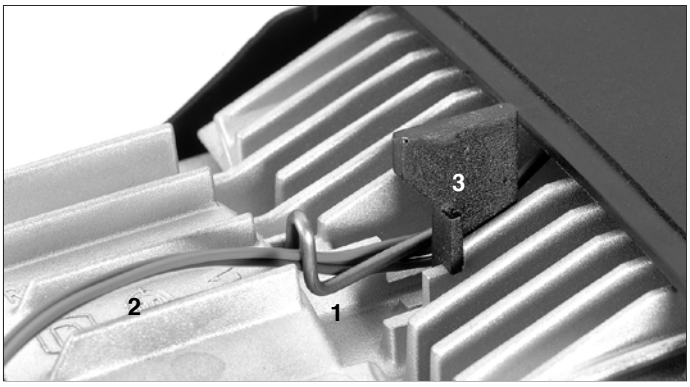

1 Clip
2 Cable harness - overheat/ flame sensor
3 Special tool - only necessary for the *AIRTRONIC* D2

Dismantling the heat exchanger
Removing the combustion air blower

- Remove the *AIRTRONIC* cover.
- Remove the ECU.

Remove the flange seal.
Take the *AIRTRONIC* out of the outer case (lower part). Unscrew the 4 fastening screws from the combustion air blower.
Remove the combustion air blower and the seal from the heat exchanger.

Note: When reassembling the combustion air blower, a new seal is always required.

Tighten the 4 fastening screws of the combustion air blower in the series shown in the drawing, with a tightening torque of 4 $^{+0.5}$ Nm. (35 in•lb)

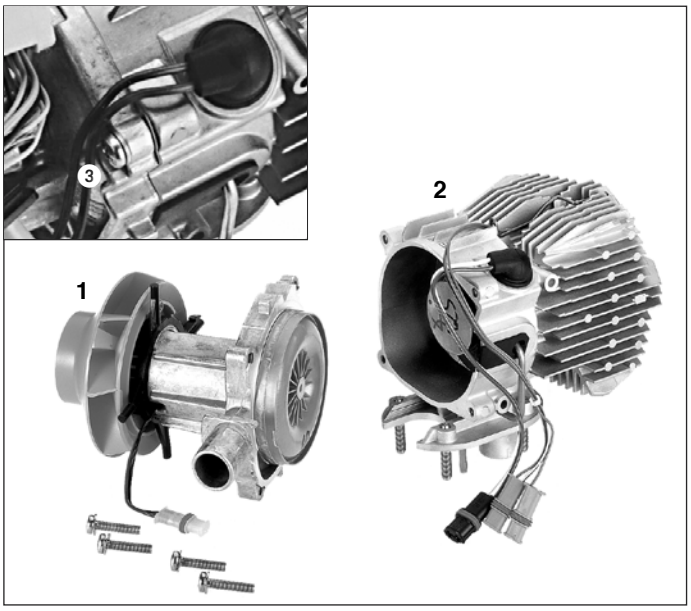

1 Combustion Air blower
2 Heat Exchanger
3 Fastening screws

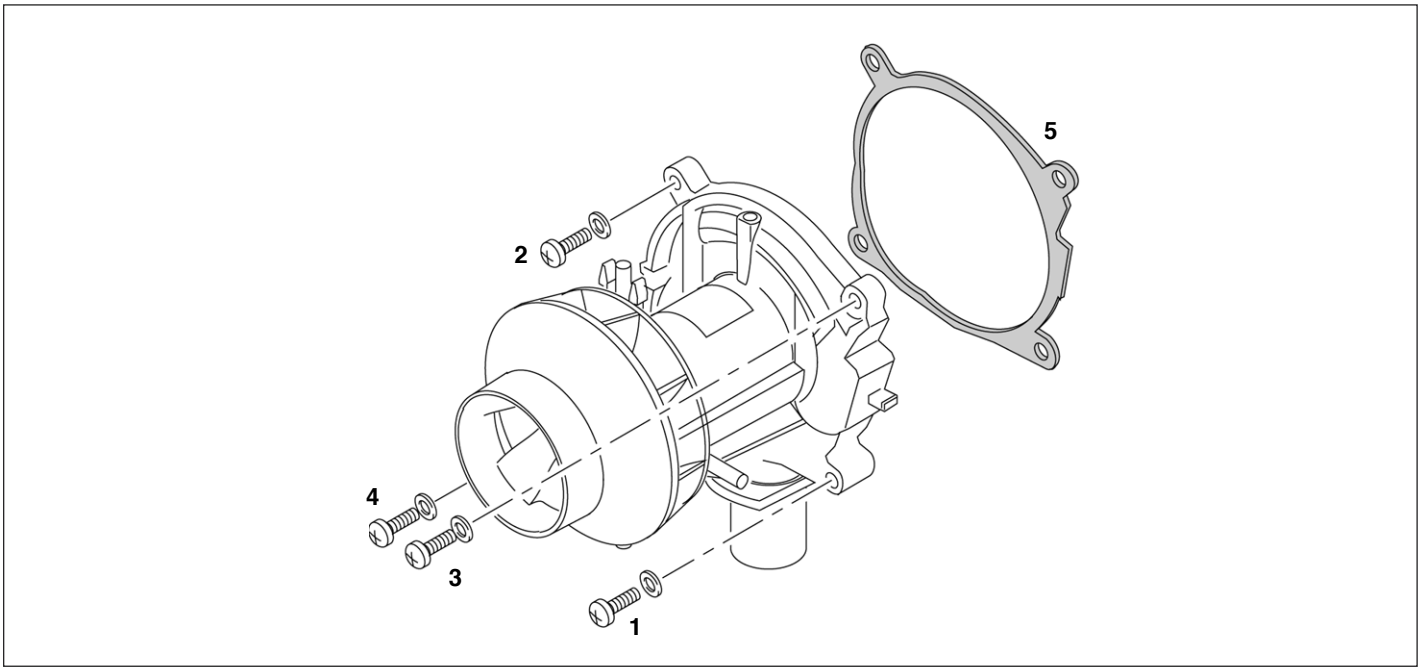

1 - 4 Tighten the fastening screws in this sequence with a tightening torque of 4 $^{+0.5}$ Nm (35in•lb)
5 Always replace the seal between combustion air blower and heat exchanger.

Removing the combustion chamber

- Remove the *AIRTRONIC* cover.

Remove the flange seal.
Take the *AIRTRONIC* out of the outer case (lower part).

- Remove ECU (see previous pages).
- Remove glow pin (see previous pages).
- Remove combustion air blower (see previous pages).

Unscrew the fastening screws.
For *AIRTRONIC* D2 = 3 fastening screws
For *AIRTRONIC* D4 = 4 fastening screws

Pull the combustion burner out to the front and remove the burner's thermal insulator from the heat exchanger.

Note: When reassembling the combustion burner, the thermal insulator, must always be replaced.

Tighten the self tapping fastening screws of the combustion chamber with a torque of 5 $^{+0.5}$ Nm. (44 in•lb)

Note: If the heat exchanger is being replaced, the overheat / flame sensor must be dismantled and mounted to the new heat exchanger (see previous pages).

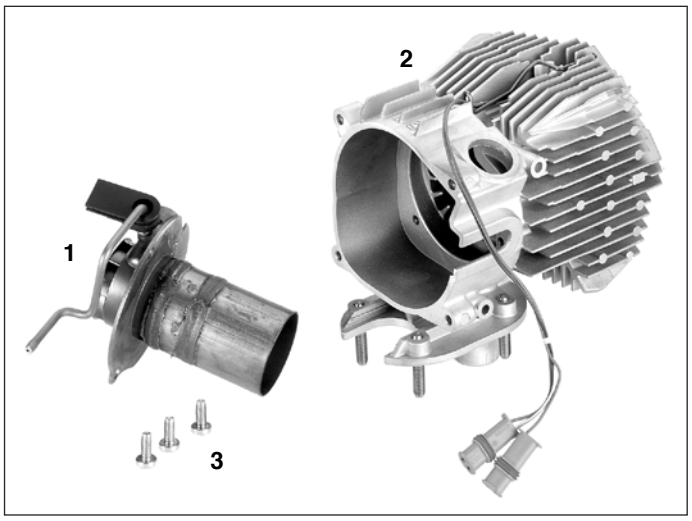

1 Combustion burner
2 Heat Exchanger
3 Fastening screws
AIRTRONIC D2 = 3 fastening screws
AIRTRONIC D4 = 4 fastening screws

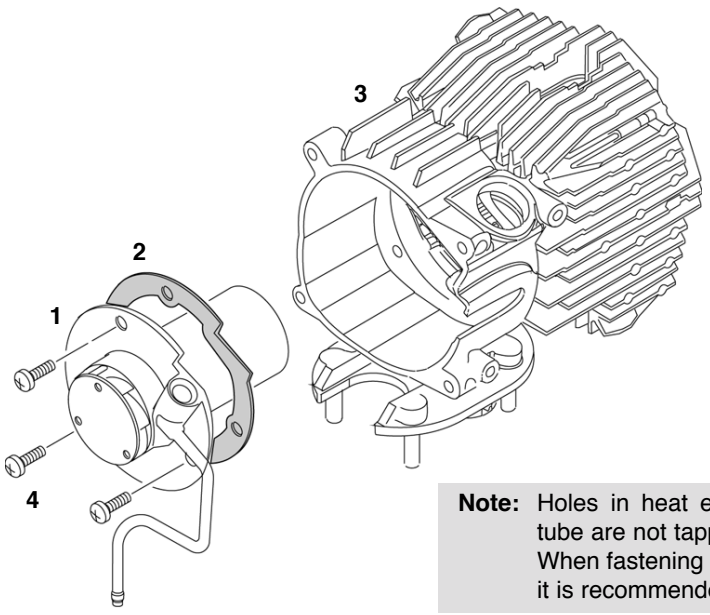

Note: Holes in heat exchanger that fasten the burner tube are not tapped.
When fastening a burner to a new heat exchanger it is recommended to use new screws.

1 Combustion burner
2 Thermal insulator between combustion burner and heat exchanger, must always be replaced if burner is removed from the heat exchanger. (Holes not threaded)
3 Heat exchanger
4 Self tapping fastening screws.
AIRTRONIC D2 = 3 fastening screws
AIRTRONIC D4 = 4 fastening screws

AIRTRONIC D2 / D3 / B / D4

Service Parts Diagram

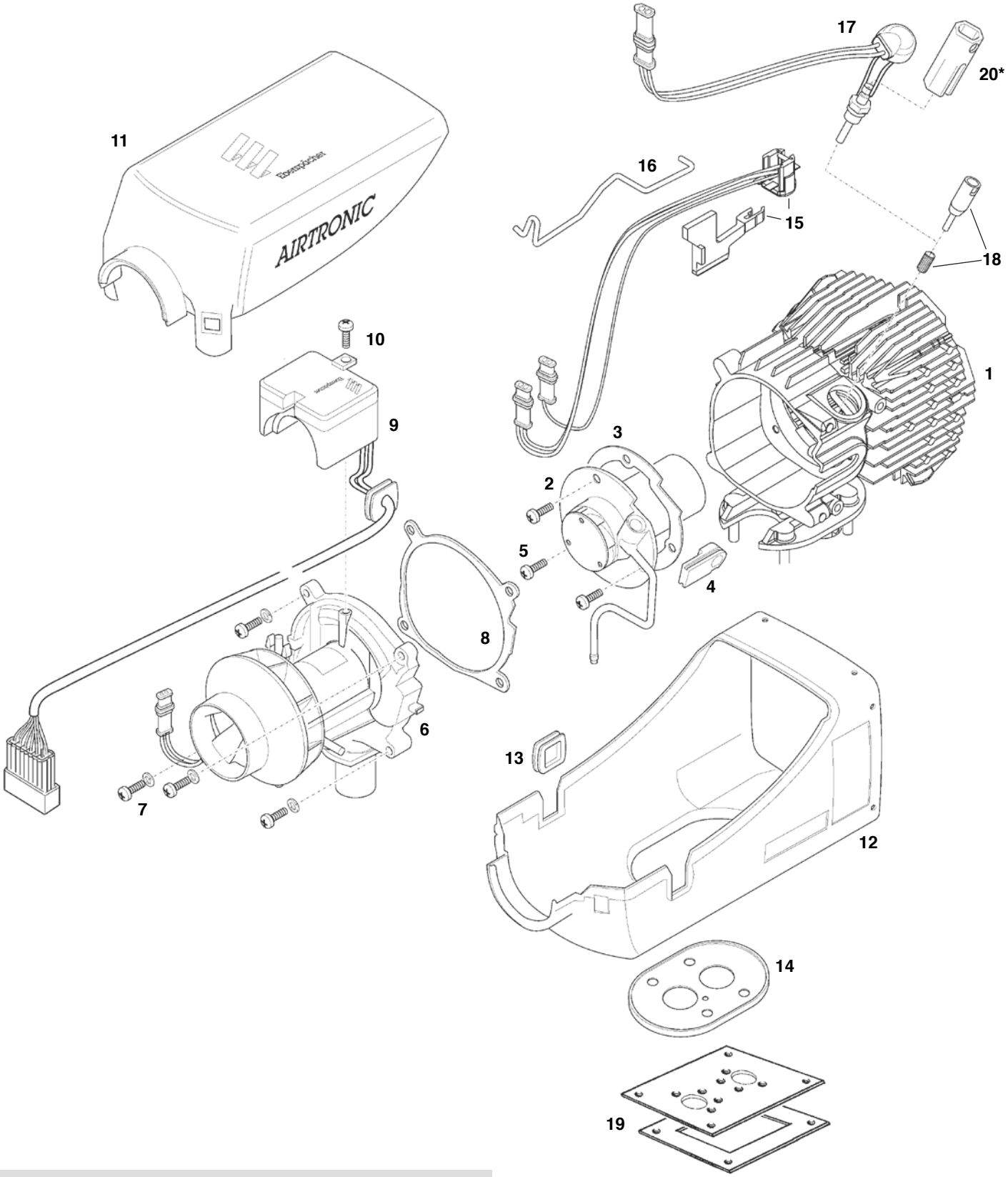

Note: Please check Pg. 37, item 20 for more information.

Heater Parts

***AIRTRONIC* D2 / B / D4**

Ref. No.	Description	Part Number	Model # 20 1812 05 12V	25 2069 05 12V	25 2070 05 24V	25 2326 05 12V	25 2113 05 12V	25 2114 05 24V	25 2144 05 12V	25 2327 05 12V
1	Heat exchanger	25 2069 06 01 00		•	•	•				
		25 2113 06 01 00	•				•	•	•	•
2	Burner	25 2069 10 01 00		•	•	•				
		25 2113 10 01 00					•	•	•	•
		20 1812 10 01 00	•							
3	Thermal insulator for burner	25 2069 06 00 01		•	•	•				
		25 2113 06 00 01	•				•	•	•	•
4	Grommet	25 2069 06 00 02	•	•	•	•	•	•	•	•
5	Fillister head bolt, M 5 x 12 (3 required)	103 10 348		•	•	•				
	Fillister head bolt, M 5 x 12 (4 required)	103 10 348	•				•	•	•	•
6	Blower motor	12V 25 2069 99 20 00		•		•				
		24V 25 2070 99 20 00			•					
		12V 25 2113 99 20 00	•				•			
		24V 25 2114 99 20 00						•		
		12V 25 2144 99 20 00							•	•
7	Fillister head bolt, M 5 x 25	Locally available hardware	•	•	•	•	•	•	•	•
8	Gasket, blower	25 2069 01 00 03		•	•	•				
		25 2113 01 00 03	•				•	•	•	•
9	Control unit	24V 22 5102 00 10 01			•					
		12V 22 5101 00 10 05					•			
		24V 22 5102 00 10 03						•		
		12V 22 5101 00 10 06							•	
		12V 22 5101 00 10 13				•				
		12V 22 5101 00 10 14								•
		Hella 12V 22 5101 00 30 01		•						
		Hella 12V 22 5101 00 30 05					•			
		22 5101 00 30 15	•							
10	Fillister head bolt, M 4 x 10	103 10 349	•	•	•	•	•	•	•	•
11	Upper casing	25 2069 01 06 00		•	•	•				
		25 2113 01 00 01	•				•	•	•	•
12	Lower casing	25 2069 01 01 00		•	•	•				
		25 2113 01 01 00	•				•	•	•	•
13	Grommet	25 2069 01 00 01	•	•	•	•	•	•	•	•
14	Flange seal	25 2069 01 00 02	•	•	•	•	•	•	•	•
15	Overheat sensor / Flame sensor with tool	25 2069 01 02 00	•	•	•	•	•	•	•	•
16	Clip	25 2069 01 02 02		•	•	•				
		25 2113 01 02 02	•				•	•	•	•
17	Glow pin with socket wrench	12V 25 2069 01 13 00	•	•		•	•		•	•
		24V 25 2070 01 11 00			•			•		
18	Glow pin screen with tool	25 2069 10 01 02	•	•	•	•	•	•	•	•
19	Mounting plate with hardware and seal	5540001	•	•	•	•	•	•	•	•
20	Glow pin wrench *	25 2069 01 03 03	•	•	•	•	•	•	•	•

***** This tool is designed for occasional usage. If heavy use is anticipated, more appropriate tools are available from tool manufacturers.

Recommended: Snap-On Flare nut socket 12mm Stock # FBXM12

Heater Parts

AIRTRONIC D2 / D3 / B / D4

Parts Diagram

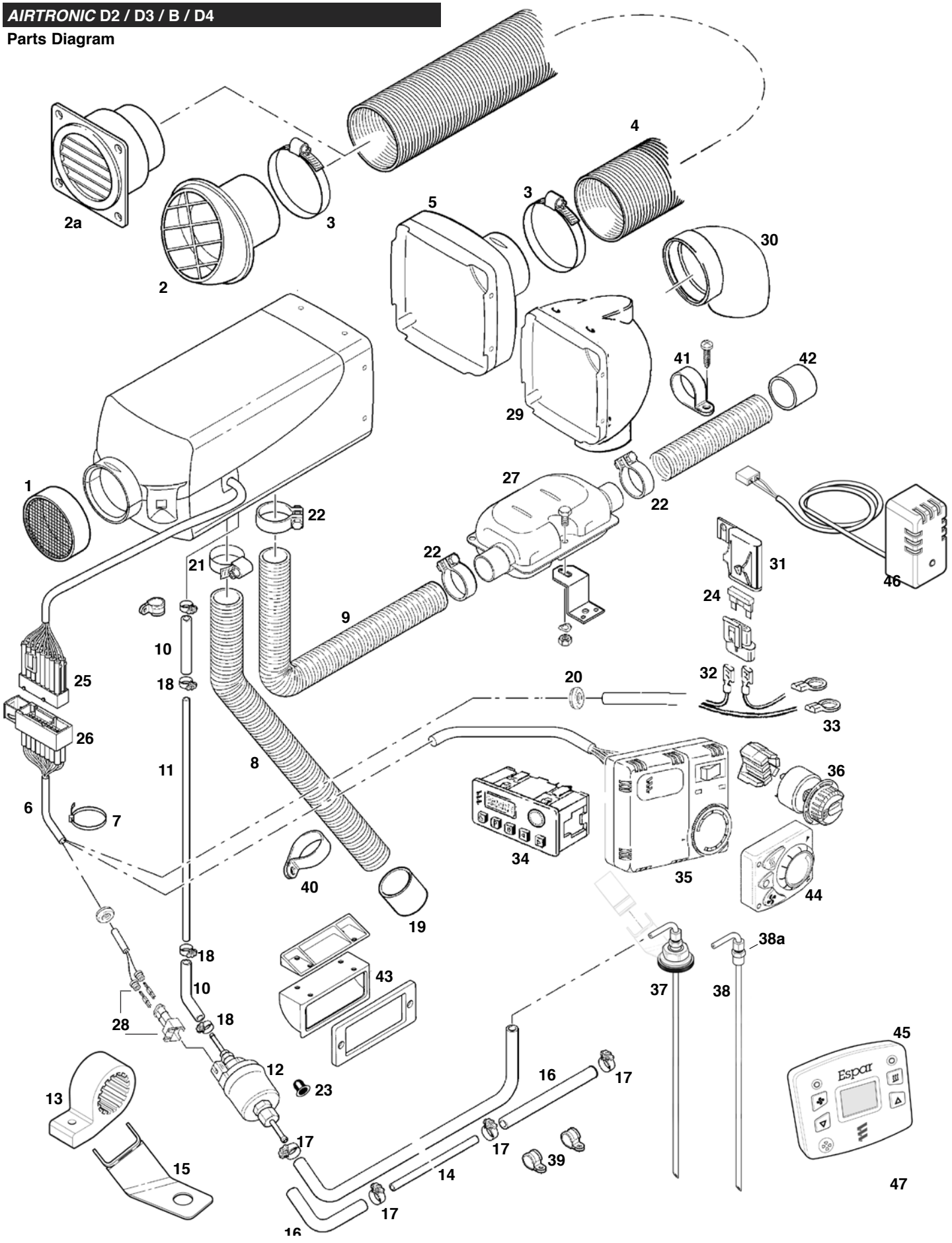

Heater Parts

***AIRTRONIC* D2 / B / D4**

Ref. No.	Description		Part Number	Model # 20 1812 05 12V	25 2069 05 12V	25 2070 05 24V	25 2326 05 12V	25 2113 05 12V	25 2114 05 24V	25 2144 05 12V	25 2327 05 12V
1	Safety screen	ø 60	25 1688 80 06 00		•	•	•				
		ø 75	25 1552 05 01 00	•				•	•	•	•
2	Warm air deflector	ø 60	20 2800 50 02 00		•	•	•				•
2a		ø 90	20 1609 80 09 00	•				•	•	•	•
		ø75	22 1050 89 21 00						•	•	•
3	Clamp	ø 50-70	5550004		•	•	•				
		ø 70-90	5550003	•				•	•	•	•
4	Flexible air hose	ø 60	10 2114 31 00 00		•	•	•				
		ø 90	10 2114 37 00 00	•				•	•	•	•
		ø 75	10 2114 34 00 00					•	•	•	•
5	Straight outlet hood	ø 60	22 1000 01 00 16		•	•	•				
		ø 90	22 1000 01 00 19	•				•	•	•	•
		ø 75	22 1000 01 00 18					•	•	•	•
6	Main harness		20 2900 70 03 91	•	•	•	•	•	•	•	•
	Short harness		20 2900 70 02 05	•	•	•	•	•	•	•	•
7	Cable ties (197mm)		5590003	•	•	•	•	•	•	•	•
8	Air intake (1 meter)	ø25 mm	360 00 006	•	•	•	•	•	•	•	•
9	Flexible exhaust (1 meter)	ø24 mm	25 1774 80 02 00	•	•	•	•	•	•	•	•
10	Fuel hose - rubber	3.5 mm	360 75 300	•	•	•	•	•	•	•	•
11	Plastic fuel line	1.5 mm	890 31 118	•	•	•	•	•	•	•	•
12	Fuel metering pump	12V	22 4519 01 00 00	•	•		•	•		•	•
		24V	22 4518 01 00 00			•			•		
13	Clamp for fuel metering pump		22 1000 50 03 00	•	•	•	•	•	•	•	•
14	Plastic fuel line - black	2 mm	890 31 125	•	•	•	•	•	•	•	•
15	Angle bracket		20 2900 40 0104	•	•	•	•	•	•	•	•
16	Fuel hose - rubber	5 mm	360 75 350	•	•	•	•	•	•	•	•
17	Clamp	11 mm	10 2068 01 10 98	•	•	•	•	•	•	•	•
18	Clamp	9 mm	10 2068 00 90 98	•	•	•	•	•	•	•	•
19	End sleeve with cross bar - 25mm plastic		25 1729 89 00 02	•	•	•	•	•	•	•	•
20	Grommet		20 1280 09 01 03	•	•	•	•	•	•	•	•
21	Intake hose clamp	ø 20-32	10 2065 02 00 32	•	•	•	•	•	•	•	•
22	Clamp	26 mm	152 61 102	•	•	•	•	•	•	•	•
23	Fuel screen		20 1312 00 00 06	•	•	•	•	•	•	•	•
24	Blade fuse	20 amp	5670055	•	•		•	•		•	•
		10 amp	5670056			•			•		
25	Plug connector - Kit		22 1000 31 80 00	•	•	•	•	•	•	•	•
26	Housing - Kit female		22 1000 31 81 00	•	•	•	•	•	•	•	•
*27	Muffler		25 1864 81 01 00	•	•	•	•	•	•	•	•
28	Connectors for fuel metering pump - Kit		22 1000 31 87 00	•	•	•	•	•	•	•	•

Heater Parts

***AIRTRONIC* D2 / B / D4**

Ref. No.	Description		Part Number	Model # 20 1812 05 12V	25 2069 05 12V	25 2070 05 24V	25 2326 05 12V	25 2113 05 12V	25 2114 05 24V	25 2144 05 12V	25 2327 05 12V
*29	90° Air outlet hood	ø 60	22 1000 01 00 20	•	•		•				
		ø 75	22 1000 01 00 22					•	•	•	•
		ø 90	22 1000 01 00 23					•	•	•	•
*30	90° Bend	ø 60	25 1688 89 00 01	•	•	•	•				
		ø 75	25 1482 89 00 05	•	•	•	•	•	•	•	•
31	Fuse holder with terminals		5670051	•	•	•	•	•	•	•	•
32	Terminals		5670199	•	•	•	•	•	•	•	•
33	3/8’ Ring terminals 10-12 G		5670178	•	•	•	•	•	•	•	•
*34	7 day timer		22 1000 30 40 00	•	•		•		•		•
				•	•	•	•	•	•	•	•
35	Thermostat	12V	301 00 154	•	•		•	•		•	
		24V	301 00 153			•			•		
*36	Operating switch (rotary)	12V	25 1895 71 00 00	•	•		•	•		•	•
		24V	25 1896 71 00 00			•			•		
37	Standard fuel pick up pipe	2 mm	20 2900 20 20 56	•	•	•	•	•	•	•	•
* 38	Fuel pick up pipe (Compression fitting type)		20 2900 20 20 42	•	•	•	•	•	•	•	•
* 38a	Compression fittings	1/4” NPT	20 2900 20 20 44	•	•	•	•	•	•	•	•
		3/8” NPT	5520002	•	•	•	•	•	•	•	•
		1/2” NPT	5520006	•	•	•	•	•	•	•	•
39	P-clamp w/Lining	10 mm	152 00 139	•	•	•	•	•	•	•	•
40	P-clamp	25 mm	152 10 048	•	•	•	•	•	•	•	•
41	P-clamp	28 mm	152 10 051	•	•	•	•	•	•	•	•
42	End-sleeve	24 mm	25 1482 80 00 01	•	•	•	•	•	•	•	•
43	Bezel kit for 7 day timer		25 1482 70 01 00	•	•	•	•	•	•	•	•
44	Mini Controller		22 1000 32 07 00	•	•	•	•	•	•	•	•
45	Digi Controller		20 2800 70 10 00	•	•	•	•	•	•	•	•
46	Ext Temp Sensor		25 1774 89 03 00	•	•	•	•	•	•	•	•
47	Fault code retrieval device		20 2900 70 50 20	•	•	•	•	•	•	•	•

*indicates optional features

Web Edition - August 2010
Subject to change
P/N: 20-2900-81-01-03

Espar Products, Inc.

(800) 387-4800

(905) 670-0960

www.espar.com